TIPS • TOOLS • TECHNIQUES

ShopNotes®

Vol. 7 Issue 39

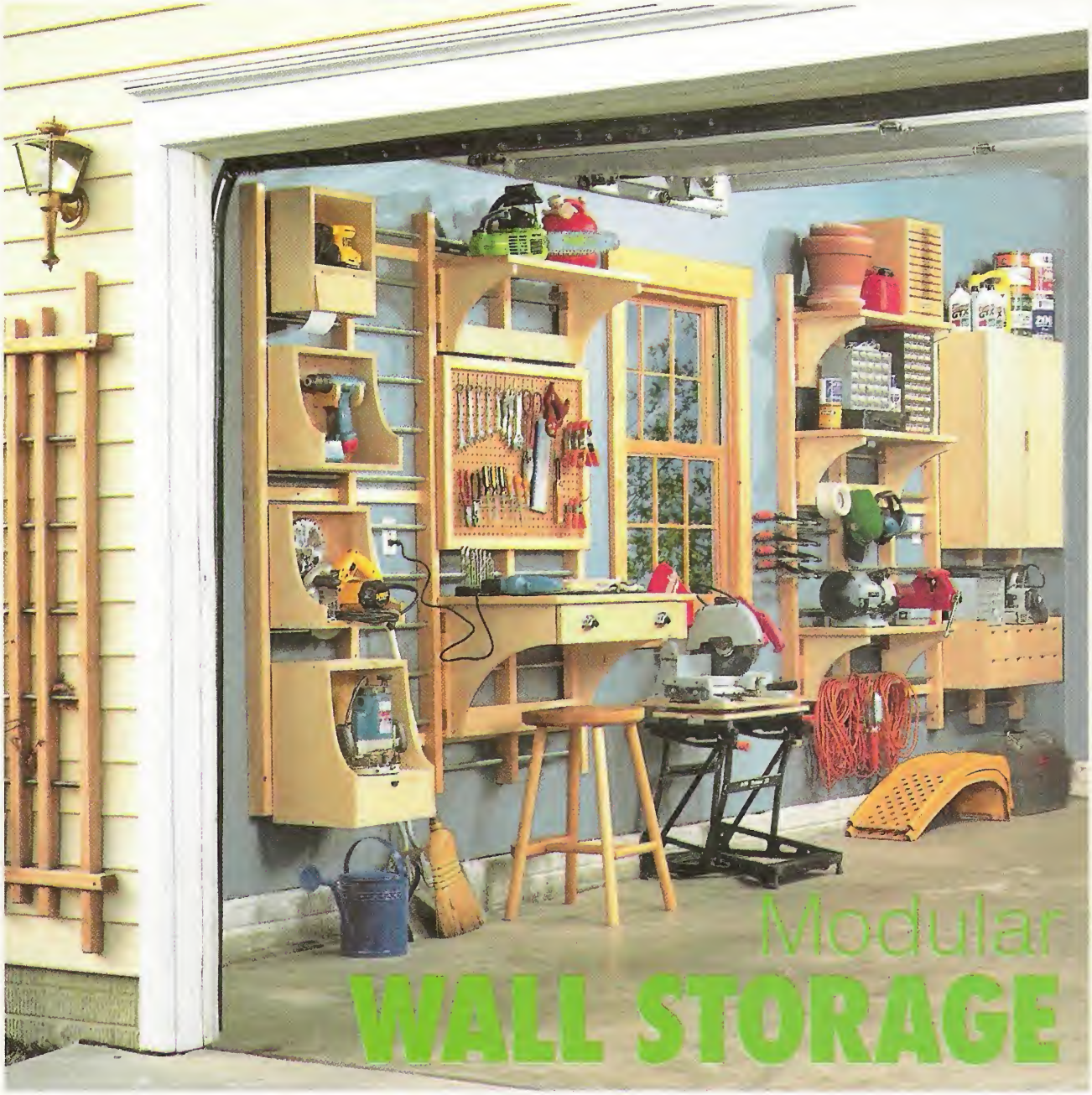

Modular WALL STORAGE

- Marking Knife
- Lathe Tool Rack
- Shop Tips
- Tool Test: Lathes
- Portable Power Tool Storage

ShopNotes®
Issue 39 May 1998

PUBLISHER Donald B. Peschke
EDITOR Tim Robertson
ASSOCIATE EDITOR Tom Begnal
ASSISTANT EDITOR Bryan Nelson
CONTRIBUTING EDITOR Douglas L. Hicks
ART DIRECTOR Cary Christensen
SR. GRAPHIC DESIGNER Kurt Schultz
SENIOR ILLUSTRATORS Roger Reiland, Mark Higdon

CREATIVE RESOURCES

Creative Director: Ted Kralicek • *Project Developer:* Ken Munkel • *Project Designer:* Kevin Boyle • *Project Coordinator:* Kent Welsh • *Shop Mgr.:* Steve Curtis • *Shop Craftsman:* Steve Johnson • *Photography Director:* Lark Smothermon • *Sr. Photographer:* Crayola England

BOOKS

Executive Editor: Douglas L. Hicks • *Senior Graphic Designer:* Chris Glowacki

CIRCULATION

Sub. Serv. Dir.: Sandy Baum • *New Bus. Dir.:* Glenda Battles • *Renewal Mgr.:* Paige Rogers • *Billing Mgr.:* Rebecca Cunningham • *Prom. Mgr.:* Rick Junkins • *Single Copy Mgr.:* Todd L. Bierle • *Asst. Sub. Mgr.:* Joy Krause • *Assoc. Graphic Design Dir.:* Susie Rider • *Sr. Graphic Designer:* Cheryl L. Simpson

CORPORATE SERVICES

V.P. of Planning & Finance: Jon Macarthy • *Controller:* Robin Hutchinson • *Sr. Acct:* Laura Thomas • *Accts. Payable:* Mary Schultz • *Prod. Dir.:* George Chmielarz • *Elect. Pub.:* Douglas M. Lidster • *Prod. Asst.:* Susan Dickman • *Prod. Artist:* Minniette Bieghler • *Pre-Press Image Spec.:* Troy Clark • *New Media Mgr.:* Gordon C. Gaippe • *Multimedia Art Dir.:* Eugene Pedersen • *I.S. Support Asst.:* Chris Harrison • *H. R. Asst.:* Kirsten Koele • *Admin. Asst.:* Julia Fish • *Recept.:* Jeanne Johnson, Sheryl Ribbey • *Bldg. Maint.:* Ken Griffith • *Special Proj. Dir.:* Saville H. Inman

MAIL ORDER

Operations Dir.: Bob Baker • *Mat'ls Mgr.:* Mark Mattiussi • *Cust. Service Mgr.:* Jennie Enos • *Warehouse Supr.:* Nancy Johnson • *Buyer:* Linda Jones • *Op. Asst.:* Tammy Aldini • *Team Leader:* Karla Eslinger • *Tech. Rep.:* Matthew TeRonde • *Cust. Serv. Reps.:* Anna Cox, Tammy Truckenbrod, Adam Best, Nancy Downey, Deborah Rich • *Warehouse:* Nancy Connelley, Sylvia Carey • *Qual. Control Tech.:* Frank Johnson

ShopNotes® (ISSN 1062-9696) is published bimonthly (Jan., March, May, July, Sept., Nov.) by August Home Publishing, 2200 Grand, Des Moines, IA 50312.
ShopNotes® is a registered trademark of August Home Publishing **©Copyright** 1998 by August Home Publishing. All rights reserved.
Subscriptions: Single copy: $4.99. One year subscription (6 issues), $24.95. Canada/Foreign add $6 per year.
Periodicals Postage Paid at Des Moines, IA and at additional mailing offices.
Postmaster: Send change of address to *ShopNotes*, P.O. Box 37103, Boone, IA 50037-2103.
Subscription Questions? Write to: *ShopNotes* Customer Service, P.O. Box 842, Des Moines, IA 50304-9961. Or call 1-800-333-5854, 8:00 am to 5:00 pm, Central Time, weekdays. FAX 515-283-0447
E-Mail: ShopNotes@shopnotes.com
Internet: http://www.shopnotes.com

PRINTED IN U.S.A.

WoodNet™
NOW ON THE WEB!
- 50 Woodworking Tips Online
- Woodworking Techniques — Step-by-Step
- Project plans you can download
- WoodNet Forum — Woodworkers' Q & A
- Power Tool Reviews

Point your browser to: **http://www.augusthome.com**
Select "Woodworking" from the Welcome Page menu.

EDITOR'S NOTE

Cutoffs

Almost every woodworker I've met has one thing in common. They're always willing to share their insights and experience about woodworking.

Sometimes it's a tip that solves a nagging problem. Or maybe it's advice on selecting a tool. Often, they simply want to "talk shop."

Whatever the reason, this wealth of ideas and information is one of the things that makes working here at *ShopNotes* so interesting. It's like being part of a giant switchboard with connections to thousands of woodworkers.

"It's like being part of a giant switchboard with connections to thousands of woodworkers."

For example, a few days ago one of our readers sent me a package with a video tape inside. As I played the tape, I got a complete tour of his shop — everything from a pair of sawhorses he'd built to the wood stove that keeps his shop warm in winter.

SHOP TOURS. Well, that tape got me to thinking. Wouldn't it be great to get a bunch of these "guided tours" from our readers and then feature some of the best ones in *ShopNotes*?

Now these shops don't have to be the ultimate "dream" shop. Perhaps it's shoehorned in a basement. Maybe it only becomes a "real" shop when you back the car out of the garage and roll your tools away from the wall. Then again, maybe your shop is in a large building with space to rattle around in. (I guess it doesn't hurt to dream.)

The point is, your shop would represent *one* solution to the challenges that confront *all* woodworkers — shop layout, storage, dealing with dust, applying finishes, and . . .

Well, you get the idea. If this sounds like something you're interested in (or you know someone whose shop demonstrates an inventive solution to a problem), how about making a short video and sending it to: *ShopNotes*, 2200 Grand Ave., Des Moines, IA 50312. We'll incorporate a "tour" of some of these shops in an upcoming issue.

TREES TO FURNITURE. Another connection came about as a result of the article in our last issue on making lumber from a tree that had blown down. This one has to do with a program called *Trees to Furniture*.

The idea of this program is to get people together who would like to salvage urban trees and turn them into lumber for projects in their own shops. It's co-sponsored by two woodworkers from Cincinnati, *Popular Woodworking* magazine, and *Wood-Mizer*. For more information, call (513) 531-2690 ext. 238.

MODULAR WALL STORAGE. One of the projects in this issue is something that always seems to be on the top of everyone's "most wanted" list — a storage system for all the miscellaneous items that accumulate in a shop.

Okay, so there are lots of shelving units out there. But what makes this one unique is it's made up of individual storage *modules*. And each module is designed with a specific purpose in mind — to hold tools, supplies, or small pieces of hardware.

These modules are supported by a set of shop-made brackets that hang on a wall-mounted grid. So if your storage needs change, you just rearrange the modules on the grid.

NEW FACE. One final note. Tom Begnal has joined us as an associate editor here at *ShopNotes*. Tom is one of those guys who has sawdust in his veins. So we're pleased to have him on board.

Tim

Contents

Features

Lathe Tool Rack ____ 6

This wall-mounted rack holds your lathe tools securely in place. Yet it only takes a second to grab the one you need and start turning. We feature two versions of the tool rack — each one using a different type of joinery.

Tool Test: Lathes ____ 10

Thinking about buying a lathe? We've rounded up a team of woodturners to test four popular models and offer practical suggestions on which one to choose.

Marking Knife ____ 14

It's hard to get accurate results when cutting to a "fuzzy" pencil line. But this shop-made marking knife scores a fine line so you know exactly where to cut.

Modular Wall Storage ____ 16

Organize all your tools and supplies with this handy wall storage system. The individual modules hang on a grid that's attached to the wall, so you can quickly rearrange the entire system if your storage needs change.

Portable Power Tool Storage ____ 26

Four custom storage units designed to hold your portable power tools and accessories. Each unit hangs conveniently on the wall-mounted grid.

Departments

Readers' Tips ____ 4

Our readers offer their own shop-tested tips to some of the most common woodworking problems.

Shop Solutions ____ 30

These two tricks from the guys in our shop will help you build the projects in this issue quickly and safely.

Sources ____ 31

Hardware, supplies, and mail-order sources for the projects featured in this issue.

Lathe Tool Rack *page 6*

Tool Test: Lathes *page 10*

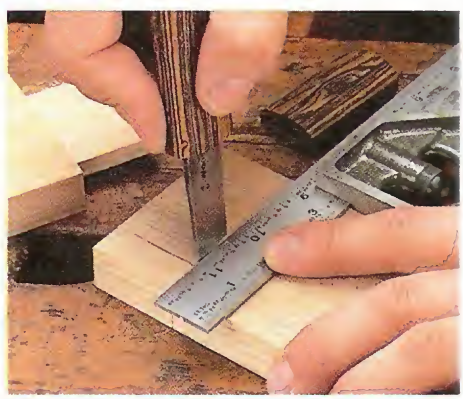

Marking Knife *page 14*

Modular Wall Storage *page 16*

Readers' Tips

Auxiliary Vise

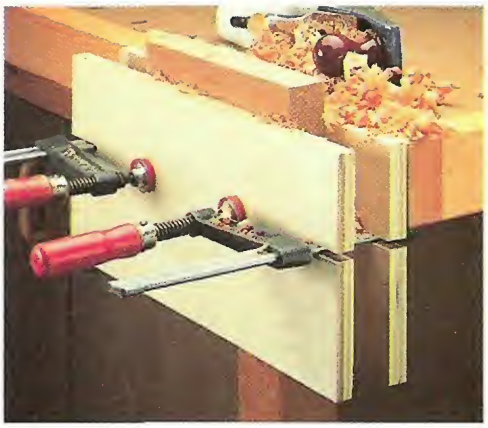

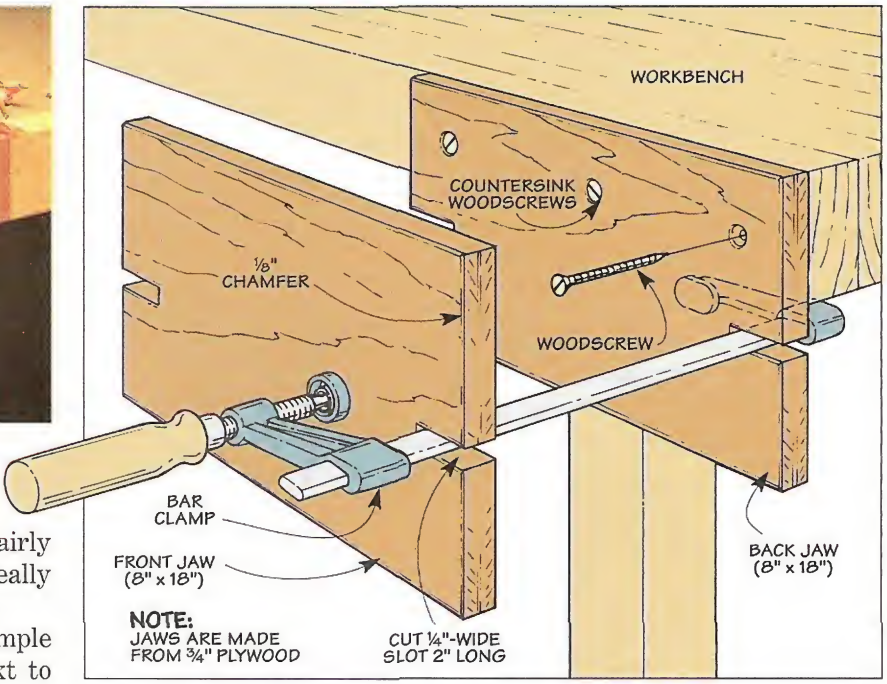

■ Occasionally, an extra bench vise would come in handy. But since they're fairly expensive, I could never really justify buying another one.

So instead, I made a simple auxiliary vise that cost next to nothing, see photo. All it takes is a couple of scrap pieces of plywood and a pair of bar clamps.

The plywood serves as the front and back "jaws" of the vise, see drawing. And the bar clamps provide all the clamping pressure that's needed, see drawing.

There's nothing complicated about making the vise. The bars on the clamps fit in narrow slots cut in the jaws. This way, when you loosen the clamps, the slots keep the clamps from falling to the floor.

One thing to be aware of is the *location* of the slots. They need to be far enough down from the top edge of the jaws to clear the bottom of the bench.

MOUNT VISE. After routing a chamfer around the edges of the jaws, it's a simple matter to mount the vise to the bench.

The back jaw is screwed to the front edge of the bench. Just be sure that it's flush (or a hair below) the top of the bench. Also, don't forget to countersink the screws so they don't damage a workpiece when it's tightened in the vise.

Finally, all that's left to do is slip the clamps in place as you add the front jaw.

Pat Pelkey
Oswego, New York

Edge-Gluing Tip

■ When edge gluing several boards to make a panel, I always place the boards on the pipe clamps to make sure the clamps are properly spaced and adjusted. Then I stand each board on edge to apply the glue.

The only problem is that a board on edge (especially a wide one) will tip over at the slightest bump. And when one board goes, all the others fall like dominoes.

To solve the problem, I clip a spring clamp on one end of each board, see photo. The spring clamp props the board up above the pipe. And the handles of the clamp serve as a stand.

Jerry Brightbill
Tonasket, Washington

Quick Tips

▲ *When glue contacts iron pipe, it can stain the wood. So* ***Mike Vincent*** *of Littleton, CO covers his clamps with foam pipe insulation.*

▲ *To repair a damaged project,* ***John Rusk*** *of Auburn, CA uses compressed air from a bottle to force glue into the crack.*

▲ *Tapping in a wedge makes it easy for* ***Art Wills*** *of Cleveland, OH to gently pry pieces apart that are joined with carpet tape.*

Sanding Pad

■ Here's a clever way to fold a quarter sheet of sandpaper into a pad that eliminates the usual grit-to-grit contact. What's nice about this pad is the unexposed surfaces won't wear as you sand with the outer surface.

The pad is also nice when sanding a project on the lathe. With four layers of insulation, my fingers don't get as hot.

To fold the pad, first make a single cut to the center of the sheet. Then follow the steps shown below. To expose a new surface, simply refold the pad.

Robert Dunn
Detroit, Michigan

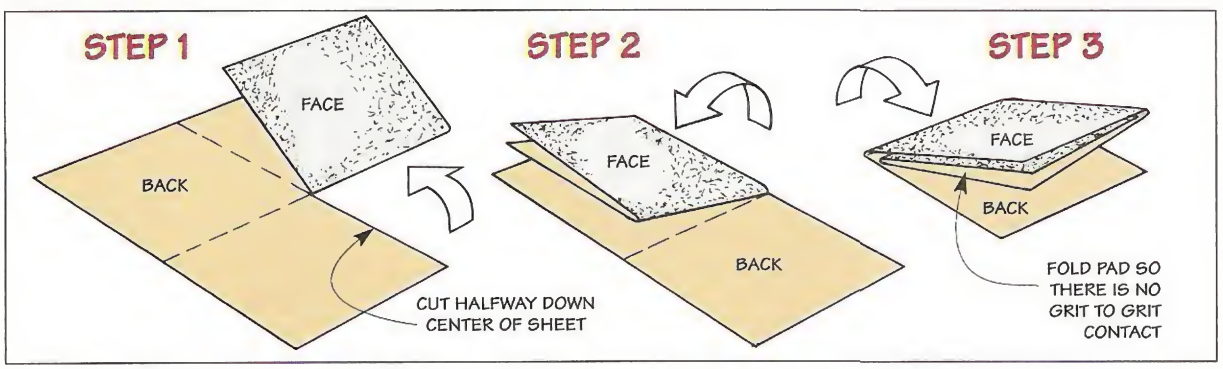

Soapstone Marker

■ Unlike pencils and pens, soapstone produces an easy-to-read mark on most metals, see photo. And since it's quite soft, a little work with a knife produces a sharp point, see inset. Note: You'll find "sticks" of ¼"-dia. soapstone at most welding supply shops.

Adolph Peschke
Des Moines, Iowa

Send in Your Tips

To share your original tips and solutions to problems you've faced, send them to: *ShopNotes*, Attn.: Readers' Tips, 2200 Grand Ave., Des Moines, IA 50312. (Or if it's easier, FAX them to us at: 515-282-6741.)

We'll pay up to $200 depending on the published length. Please include a daytime phone number so we can call you if we have any questions.

Lathe Tool Rack

This simple rack provides easy access to your lathe tools. Yet it still holds them securely in place.

I walked into the shop with a box under my arm, feeling like a kid on Christmas morning. New tools do that to a woodworker.

As I removed each item from the box, I looked it over carefully and set it on my bench. Soon, seven brand new turning tools were lying in front of me. This was the set of turning tools I'd wanted for a long time.

The new tools were a replacement for a set I'd been using for many years. Although the old set had served me well, these new tools had blades made from high-speed steel. As a result, the blades would hold an edge longer than the carbon steel in my old tools. So I wouldn't have to stop and sharpen them as often.

Of course, now that I had my new tools, I wanted a rack to keep them from accidentally falling to the floor and getting nicked up. But I also wanted to be able to remove a tool and put it back quickly and easily.

So I decided to make a simple, wall-mounted rack, see photo above. To hold the tools securely in place, they're tilted back at a slight angle, and the blades rest in a series of curved notches. Yet I can quickly grab a tool, do some turning, then set it back in the rack.

Over time, this constant repetition of taking tools out and putting them back in can loosen the joints of the rack. So a strong mechanical joint is a must.

JOINERY. To accomplish this, we've included two different versions of the tool rack, see photos on page 7. One is held together with hand-cut through dovetail joints. And the other is assembled with rabbets, woodscrews and plugs. (For more information on the rabbeted version, refer to page 9.)

Design Note: Both of these racks are designed to hold tools up to 20" long. But you can easily modify them to fit any number (or length) of tools.

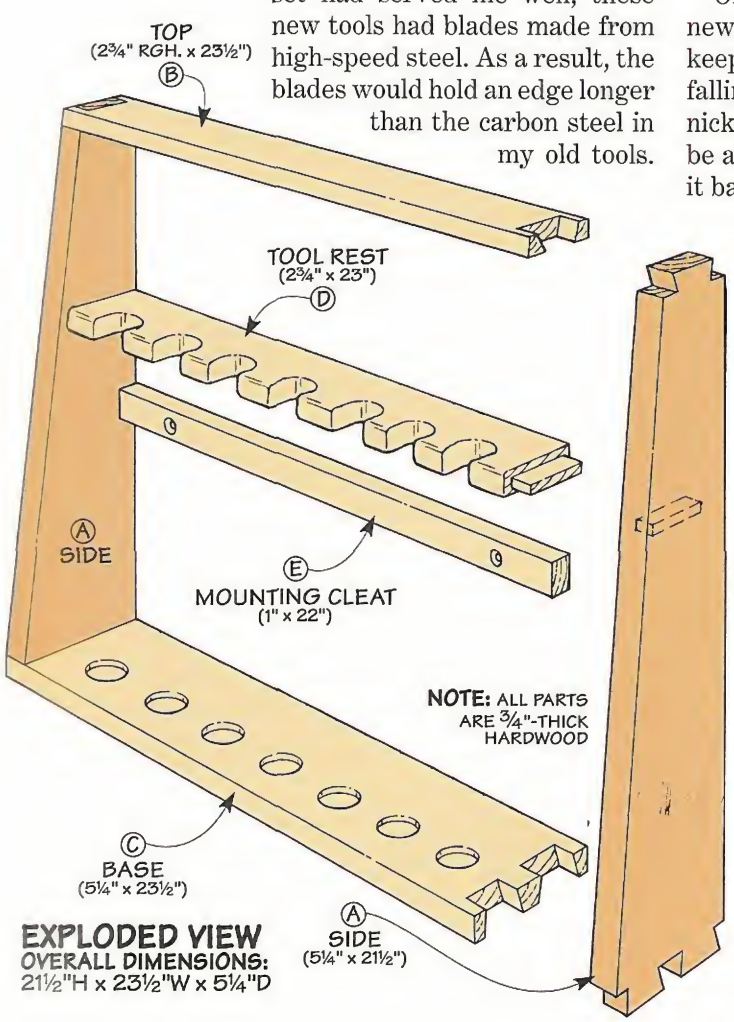

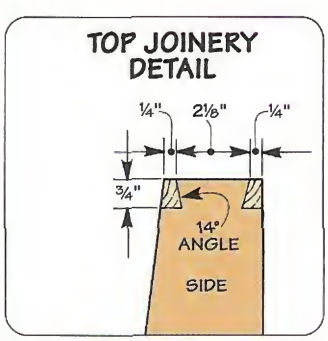

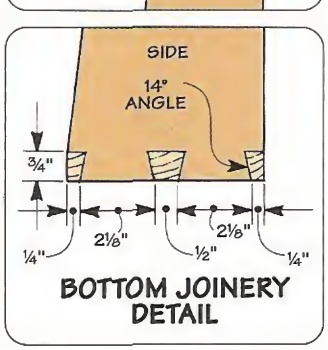

DOVETAILED RACK

Although dovetail joints are a practical solution to strengthening the rack, I'm also quite fond of how they look. To make this rack even more special, I used quartersawn white oak.

SIDES. The rack starts out as two *sides (A)* that are mirror images of each other, see Exploded View on opposite page and Fig. 1 below. To accept a tool rest that's added later, there's a narrow mortise that runs horizontally across each side.

The location of this mortise establishes the final position of the tool rest. So it's a good idea to check that the tool rest will be high (or low) enough to support the blades of your turning tools.

After laying out the mortises, it's a simple matter to cut each one. Just drill a series of overlapping holes, then clean up the sides of the mortise and square up the ends with a chisel.

TAPERS. Once the mortises are complete, the next step is to cut a gradual taper on the front edge of each side. The tapered sides give the rack a low profile, so it doesn't stick out too far from the wall.

Note: To create a short "flat" where the base of the rack meets the sides, I started this taper ¾" up from the bottom.

▲ *Two Versions. You can use hand-cut dovetail joints (see photo at left) or rabbets, woodscrews, and plugs (right) to hold the rack together. Either way, it creates a strong, mechanical joint.*

TOP & BASE. At this point, you can set the side pieces aside and concentrate on the *top (B)* and *base (C)*, see Figs. 2 and 3.

Both of these pieces are cut to final length. And the base is ripped to final width. But to match the taper on the sides, I first ripped the top to a *rough* width of 2¾". Then I beveled the front edge to match the angle on the sides, see Fig. 2a.

DOVETAILS. Now it's just a matter of laying out and cutting the dovetail joints, see Joinery Details on page 6. Editor's Note: For step-by-step instructions on cutting dovetails by hand, refer to *ShopNotes* No. 18.

POCKETS. There's just one thing left to do to complete the base. That's to drill a row of large, shallow holes that form "pockets" for the bottom ends of the tool handles, see Fig. 3.

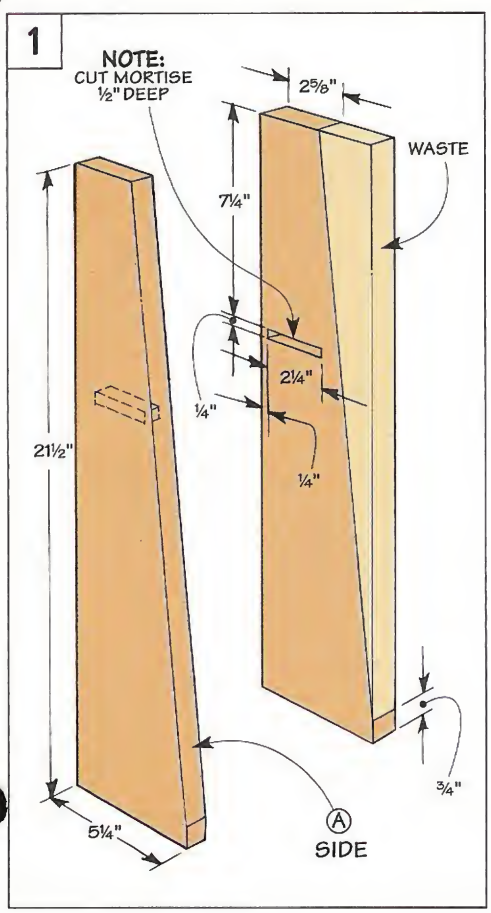

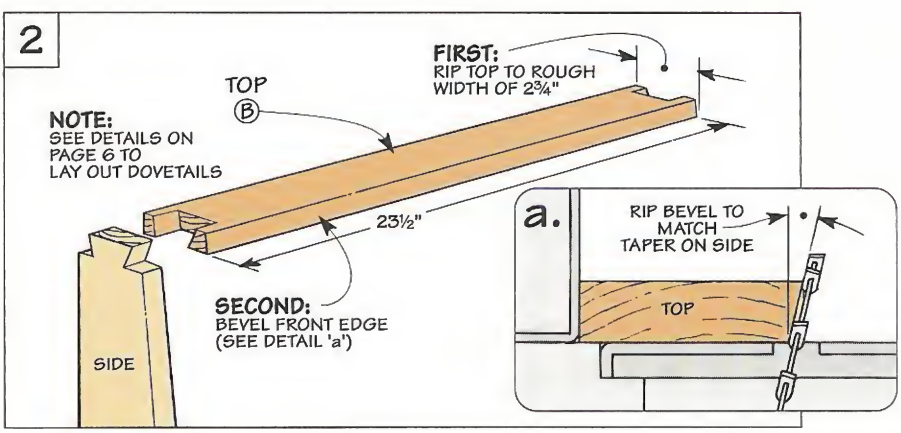

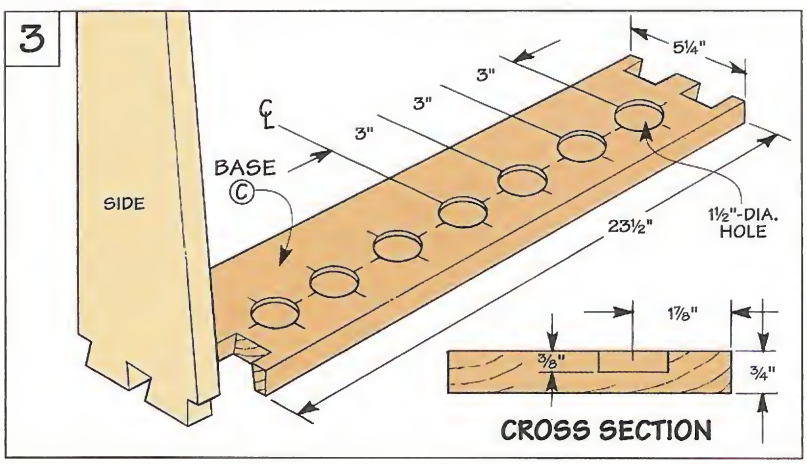

Tool Rest

▲ *To hold the large blade of my roughing gouge, I cut one notch a bit wider and deeper than the others.*

▲ *The rack is held securely in place by driving screws through a cleat and into the wall.*

At this point, the parts that make up the outer frame of the tool rack are complete. But before assembling them, I added a tool rest that spans the *inside* of the frame, see Fig. 4.

The tool rest does exactly as its name implies. To prevent the tools from falling out (or tipping to the side), the rest cradles each blade in a curved notch.

There's nothing complicated about the tool rest. It's a piece of ¾"-thick hardwood with a tenon centered on each end that fits the mortises in the sides.

NOTCHES. Once the tenons are cut, you can turn your attention to the curved notches. To keep the tools aligned, the notches are centered on the holes in the base.

After laying out the notches, I drilled holes to form the ends of the notches, see Fig. 5. Then I removed the remaining waste using the table saw, see Fig. 5a.

Note: To accept my roughing gouge, I cut the notch on the far right side a bit *larger* than the others, see top photo in margin.

ROUND EDGES. All that's left to complete the tool rest is to rout a roundover on the front edges, see Figs. 6 and 6a. Since the tool blades are bound to knock against the rest, this will help prevent the edges from chipping.

MOUNTING CLEAT. After gluing up the rack, I added one final piece — a *cleat (E)* that's used to secure the rack to the wall, see bottom photo in margin. The cleat is a strip of hardwood glued flush to the back edge of the tool rest, see Fig. 4.

After mounting the tool rack, I immediately added my new turning tools. Stepping back, I only allowed myself a few minutes to admire it. After all, it was time to start turning.

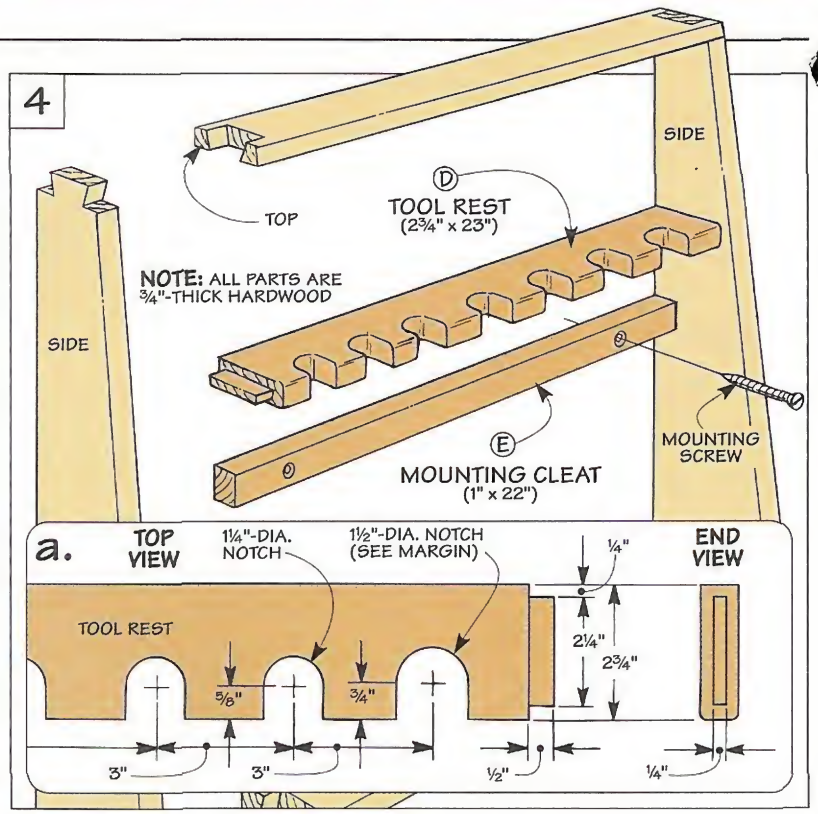

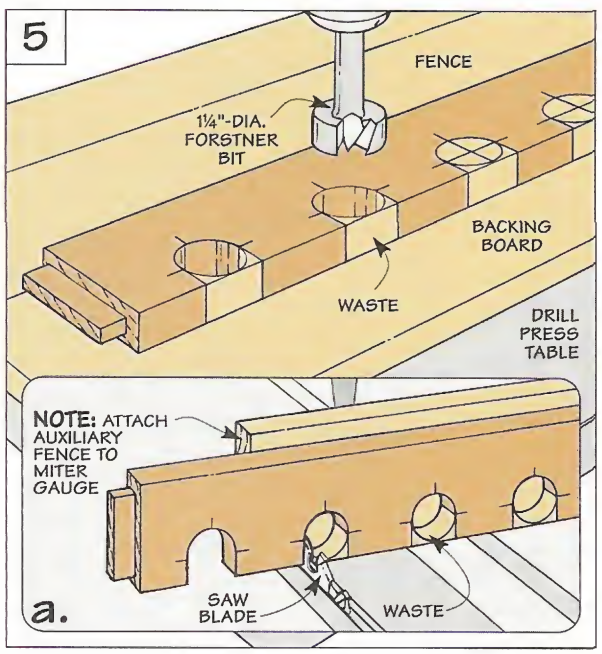

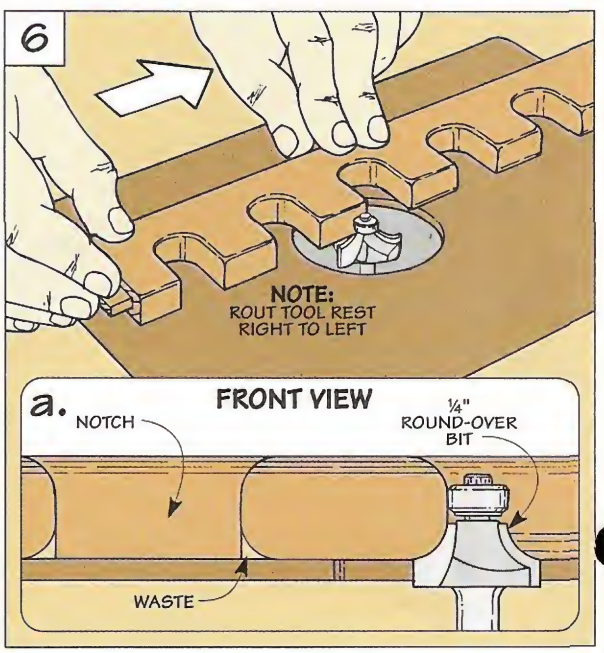

Rabbet Joint

Tool Rack

I really liked the way the dovetailed tool rack shown on page 6 turned out. But let's face it. You'll have to invest some time to cut the dovetail joints.

So we've included another version of the rack that's quicker to build. It's assembled with simple rabbet joints that are reinforced with woodscrews, see Exploded View. Note: We made this rack from cherry.

SIDES. As with the dovetailed version, the *sides (A)* of this rack have a single mortise to accept the tool rest. And here again, they're tapered along the front edge, see Fig. 1. But before you cut these tapers, it's easiest to rabbet both ends of each side.

TOP & BASE. The main difference between the two racks is the *length* of the *top (B)* and *base (C)*. In the dovetailed tool rack, both of these pieces extend *through* the sides. However here, they are 1¼" shorter to account for the rabbets in the sides.

TOOL REST. Even though the rabbets affect the length of the top and base, the distance between the *sides* of the rack is the same. So the *tool rest (D)* is identical in length. And the tenon and curved notches in the tool rest are the same as before.

ASSEMBLY. Here again, the rack is glued together. But since the end grain of the top and base won't provide a strong glue joint, the rabbets are reinforced with woodscrews. To cover the screw heads, I drilled counterbored shank holes in the sides and glued in wood plugs, see detail below.

After trimming the plugs flush and sanding them smooth, all that's left is to add a *mounting cleat (E)* and attach the rack to the wall.

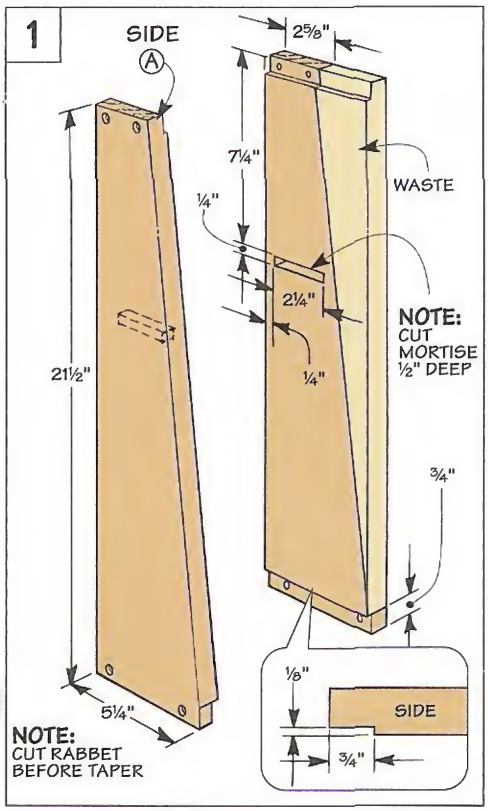

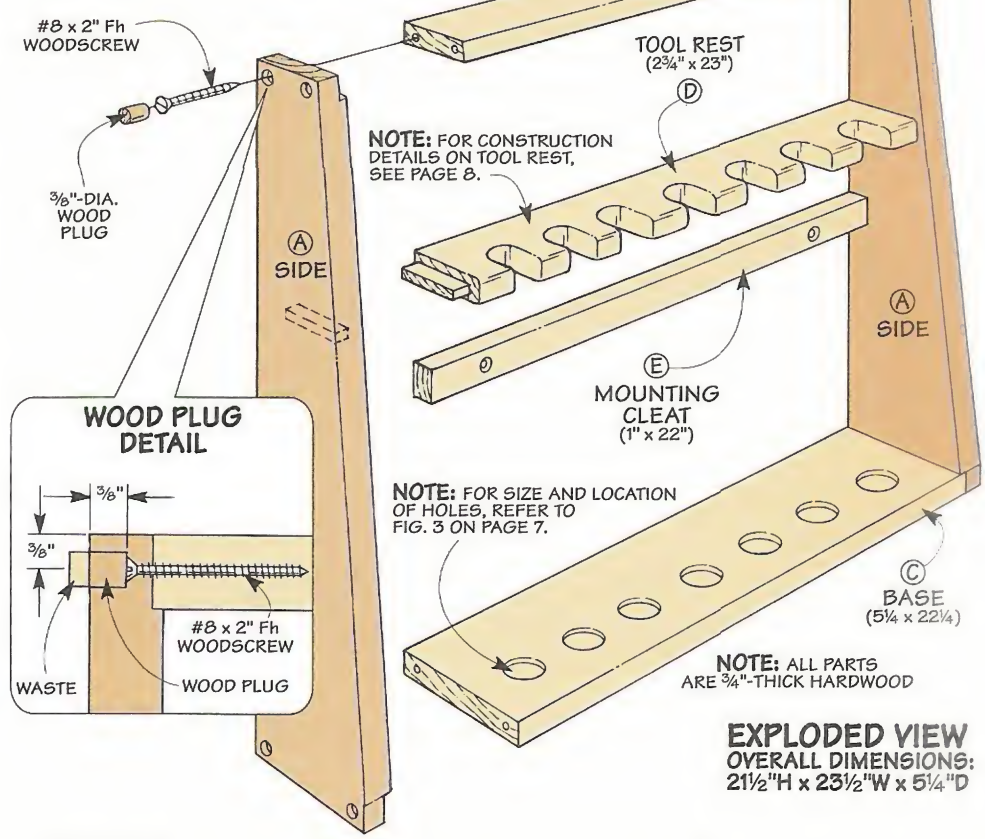

Tool Test: Lathes

How We Selected the Lathes

Each lathe we tested has:

- *outboard turning capability*
- *a metal stand*
- *costs between $450 - $570*

Lately, there's been a lot of interest around here in turning projects on a lathe. In fact, several of the guys are thinking about buying a lathe of their own.

So they've been busy doing their homework — finding out which lathes are available, checking out the "specs" on each one, and comparing prices.

But the guys ran into the same problem that faces anyone who's considering getting a lathe. How do you know which one is best?

After all, just looking at a lathe in the tool department (or in a woodworking catalog) doesn't give you a good idea of its overall performance. Not like actually turning a bowl or table leg.

So to help make that decision easier, we decided to test four lathes, see photos below and on page 11.

TEAM. To provide a wide range of viewpoints, we rounded up a team of three woodturners — each with a different amount of experience. *Bruce* is a professional woodturner, and *Paul* has been turning for fifteen years now. But *Steve* only got bit by the "turning bug" about six months ago.

Q: *Steve, you assembled all these lathes. What can you tell us about the initial setup?*

Steve: Well, there really wasn't that much involved in setting up the lathes. The only one that needed a little extra work was the Bridgewood. And that was just a matter of drilling holes in the stand for the bolts that secure the lathe bed.

Once I slid the headstocks, tailstocks, and tool rests in place, the Delta and Bridgewood were all ready to go. But with the Jet and Grizzly, I still had to wire the motor to the on/off switch.

The hookup on the Jet was simple — like plugging in an extension cord. But with the Grizzly, I had to connect the three "leads" that run from the motor to the switch. That required a little more fussing around, but it's not really a big deal.

Bridgewood BW-100WL
800-235-2100
$499.00

Delta 46-701
800-438-2486
$498.95

Grizzly G1067Z
800-523-4777
$449.00

Lathe Capacity			
Models Tested	Maximum Spindle Length	Maximum Workpiece Diameter	
		w/o Tool Rest	w/ Tool Rest
Bridgewood	35"	12"	8¾"
Delta	36½"	12"	8"
Grizzly	40½"	14"	10⅜"
Jet	34"	12"	9"

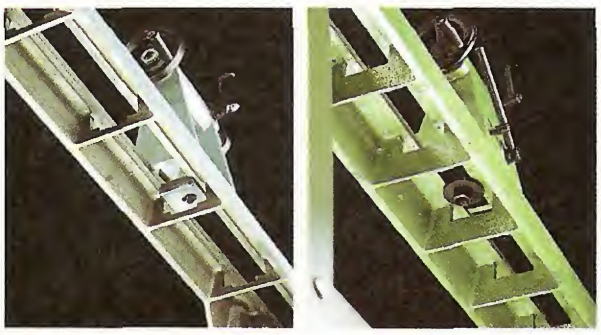

◀ *Lathe Beds. The small, thin "webs" under the bed of the Delta (left) don't provide as much rigidity as the large, beefy supports on the Grizzly (right).*

There is one thing that bothered me though. The Grizzly and Bridgewood both have plastic levers that are used to lock in the height of the tool rest and the spindle on the tailstock. I ended up snapping off *both* levers on the Grizzly. It would be great if they had metal levers like the Jet and Delta.

Bruce: But don't let the plastic levers fool you. All you have to do is move the Bridgewood and Grizzly one time to know that they're solid, heavy-duty tools. And the same thing is true for the Jet.

All three of these lathes have one thing going for them right out of the box — they've got the mass that's needed to help dampen vibration set up by the lathe. (See chart at right.)

Weight	
Bridgewood	192lbs
Delta	134lbs
Grizzly	176lbs
Jet	163lbs

This keeps the lathe from "walking" when I'm roughing out a big blank. And the extra stability it provides makes it easier to turn a project with a nice, smooth surface.

Q: *But these lathes are all about the same size. So why is there such a big difference in weight?*

Paul: One of the biggest reasons is the *bed* of the lathe. The Grizzly, Jet, and Delta all have a flat, cast iron bed. So you'd expect them to weigh about the same. But the Delta is much lighter and less rigid. One reason is the "webs" underneath the bed are smaller and spaced farther apart than the large webs on the Grizzly and Jet. (See photos above.)

Q: *What about the bed on the Bridgewood?*

Steve: It has a different type of bed altogether. It's made up of two solid, steel rods. (Refer to bottom left photo on page 10.) This adds plenty of weight. But the rods flex more than the cast iron beds on the other lathes.

Bruce: There is one advantage to the rods though. If I need to turn a long spindle like a bedpost or porch column, I can increase the capacity of the lathe by replacing the existing rods with longer ones.

Paul: That's not something I'm too concerned about. All of these lathes have the capacity to handle just about any project I'm likely to turn. (See chart above.)

What's more important to me is the tool rest. Since I'm constantly adjusting the tool rest to keep it close to the workpiece, I want to be able to do that without a lot of fiddling around.

That's easy with the tool rest on the Delta, Jet, and Grizzly. I just unlock a single lever to slide the tool rest along the bed of the lathe *and* adjust it in and out at the same time. (See photos below.)

But the tool rest on the Bridgewood is a hassle to use. To slide it along the bed, I have to loosen a lever on the *bottom* of the tool rest. Then I have to unlock a second lever on *top* to adjust it in or out.

Jet JWL-1236
800-274-6848
$569.95

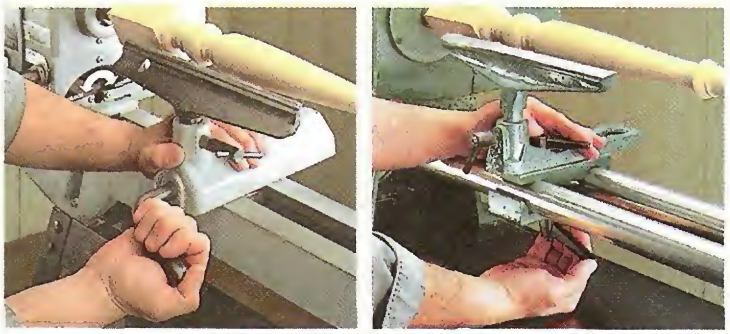

▲ *Tool Rests. Unlocking a single handle on the Delta (left) lets you slide the tool rest along the lathe bed and in and out at the same time. The Bridgewood (right) requires loosening two levers.*

Performance

Q: *When it comes to the overall performance of a lathe, what's the main thing you're looking for?*

Bruce: Basically, it boils down to one thing — the lathe *has* to run smoothly. If there's any vibration, it will transfer to the workpiece and make it hard to get a nice, smooth finish.

Q: *So how do these lathes stack up against each other?*

Bruce: The Bridgewood, Jet and Grizzly run extremely smooth. With these lathes, the spindle that drives the workpiece is supported by a heavy-duty, cast iron headstock.

But the casting that supports the spindle on the Delta is considerably smaller. That may explain why there's more vibration with this lathe. Also, the headstock has a *plastic* housing that rattles as I'm turning — especially at low speeds.

Paul: No matter what the headstocks are made of, there's one neat thing about all of them. I can rotate the headstock so the spindle points *out* at me when I'm standing at the lathe. (See photos above.)

Spur Center. A small spur center with a No. 1 Morse taper (top) isn't as well-suited to turning a large project as the thick No. 2 Morse taper shown on the bottom.

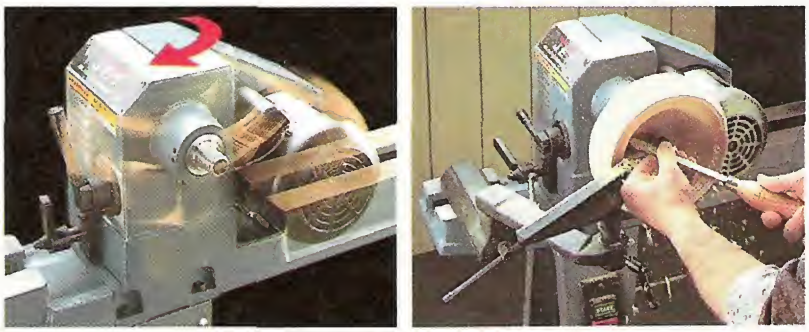

▲ *Outboard Turning.* The headstocks on all these lathes can be rotated 90° to the bed (left). This lets you turn large diameter workpieces. And it positions the workpiece for easy access (right).

This "outboard turning" is ideal when I'm working on a bowl. I can waste out the inside of the bowl without having to lean over the lathe bed. And since the workpiece isn't spinning directly over the lathe bed, I can turn a much larger bowl.

Q: *To turn everything from large bowls to small spindles, these lathes have a wide range of speeds. Were they up to the job?*

Paul: With the exception of the Delta, all of the lathes had a wide range of speeds that will work for any of my turning projects. (See chart at left.)

But I can "stop" the Delta at the low end of its speed range

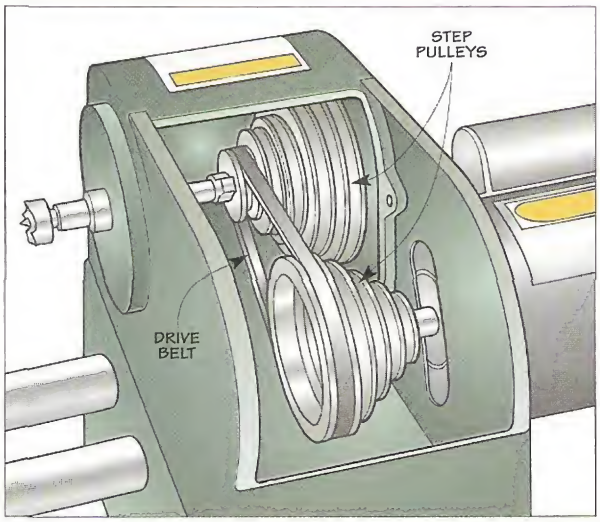

A. Step Pulleys. Lathes with step pulleys have a fixed number of speeds. To change the speed, you have to manually shift the belt to a different pair of pulleys.

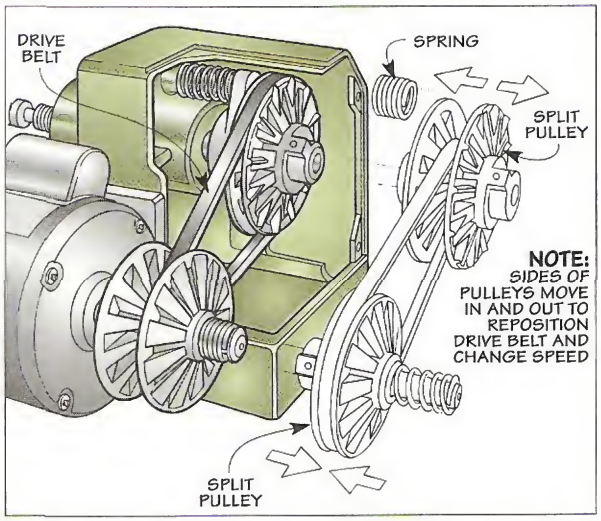

B. Split Pulleys. A system of split pulleys allows for infinitely variable speeds within the range of the lathe by simply adjusting a lever.

with just a moderate amount of pressure. And at the high end, it's too slow for me to turn a nice smooth surface on a project.

Q: *How easy is it to change from one speed to another?*

Paul: That's where I noticed the biggest difference. The drive belt on the Bridgewood is guided by a pair of step pulleys. (See drawing A on opposite page.)

So to change speeds, I have to stop the lathe and manually move the belt from one set of pulleys to another. That gets to be a nuisance.

Steve: The speed adjustment on the other lathes is handier. I just turn a lever to "dial in" a different speed. And I don't even have to turn off the lathe.

Q: *That sounds pretty complicated. How does it work?*

Bruce: It's simpler than you'd expect. What makes it work is a pair of *split* pulleys that guide the drive belt. (See drawing B.)

When I turn the adjustment lever, two springs spread the sides of the pulleys apart or "squeeze" them together. This shifts the belt closer to the center (or the rim) of each pulley which changes the speed of the spindle.

Q: *The spindle on the headstock of a lathe is easy to take for granted — until you start adding accessories. What's important here?*

Paul: One thing I look at is the diameter of the spindle and the number of threads per inch (TPI). (See photos above.) To make it easy to find accessories, I'd steer clear of lathes with odd-ball sized spindles. Fortunately, you shouldn't have any trouble finding accessories to fit the spindles on any of these lathes.

Bruce: The size of the spindle also determines the taper on the spur center that drives the workpiece. (See margin on page 12.)

Since the Bridgewood has a smaller spindle than the other lathes, it has a spur center with a No. 1 Morse taper. That doesn't seem to match the scale of the projects I'd be turning on a lathe with its capacity. The No. 2 Morse tapers on all the other spur centers seems like a better match.

◀ *Spindles. It's easy to find accessories for the 1" x 8 Threads Per Inch (TPI) spindle on the Jet (shown at top) and Delta. Accessories for the 1" x 12 TPI spindle on the Grizzly (center) and the ¾ x 16 TPI spindle on the Bridgewood (bottom) are also readily available.*

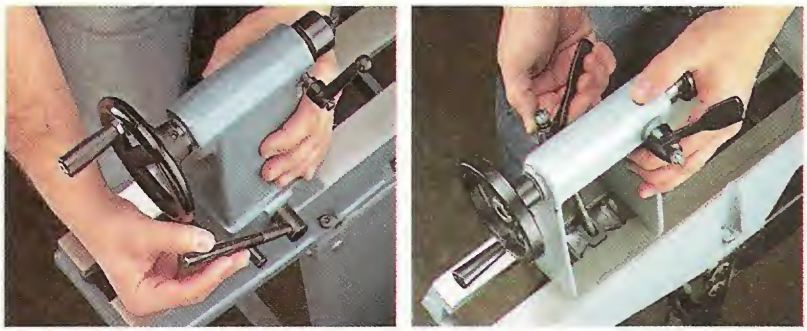

▲ *Tailstocks. In addition to a heavy-duty casting, the tailstock on the Jet (left) has a locking lever in back. So it's not as likely to snag your clothes as the front lever on the lightweight Delta tailstock (right).*

Q: *That takes care of the business end of the lathes. But what about the opposite end — the tailstocks?*

Bruce: Well, I'm starting to sound like a broken record. But I like the heavy-duty castings on the tailstocks of the Jet, Grizzly, and Bridgewood. (See photos at left.) They provide better support for the workpiece than the lightweight casting on the Delta.

Paul: One thing about all of these tailstocks is each one has a "live" center that rotates *with* the workpiece. This way, I don't have to lubricate the end of the workpiece to keep it from burning.

Also, a removable centerpoint is a handy feature, see margin.

▲ *Removable Point. The "live" centers of the Jet and Grizzly have a removable point. This lets you drill through the center and into the end of a workpiece like a lamp.*

Recommendations

Steve: When it comes to picking the best lathe, there's no doubt in my mind. I'd buy the Grizzly.

It's the least expensive lathe of the bunch. But I get a lot for my money. I like the heavy-duty castings used for the lathe bed, headstock, and tailstock. Combine that with its variable speed control, and it's a tough lathe to beat.

Paul: All through the test, two lathes kept coming out on top — the Jet and the Grizzly. But when it comes to overall performance and quality, I'd pick the Jet.

It runs smoother than the Grizzly. And it has a ¾ hp motor instead of the ½ hp motor on the Grizzly. Even small things (like metal levers) make it a winner.

Bruce: I also went back and forth between the Jet and the Grizzly. Only I chose the Grizzly.

The extra capacity provided by the Grizzly is a big plus in my book. And I don't see the ½ hp motor as a drawback — especially if you use a light touch. With the low price of this lathe, you can't go wrong.

FINE TOOL

Marking Knife

▲ *A hardwood with a dramatic grain pattern (like the bocote shown here) is an ideal choice for the wood body of this marking knife.*

When it comes to laying out a joint, it's hard to beat the accuracy you get when using a marking knife. That's because the blade on a knife scores an extremely fine line, see photo at right. So unlike a thick pencil line, you know exactly where to cut.

Although there are a number of different knife blades available, I used a short, laminated steel blade. The metal on this type of blade is extremely hard. And the edge stays sharp for a long time. (For sources of blades, refer to page 31.)

The only drawback is these blades are too short to provide a comfortable grip. (The blade I used is 2½" long.) But by enclosing the blade in a wood body, I made a marking knife that's easy to use.

BODY. The body of the knife consists of two parts: a handle that holds the blade securely in place, and a cap that keeps the edge from getting nicked. Both of these parts are made from a single ¾"-thick blank. (I used bocote.)

The first step is to resaw the blank into two pieces of different thicknesses, see Fig. 1. Later, a recess will be cut in the thick part to hold the blade. This way, when the thin part is glued back on, the blade will automatically be centered in the body of the knife.

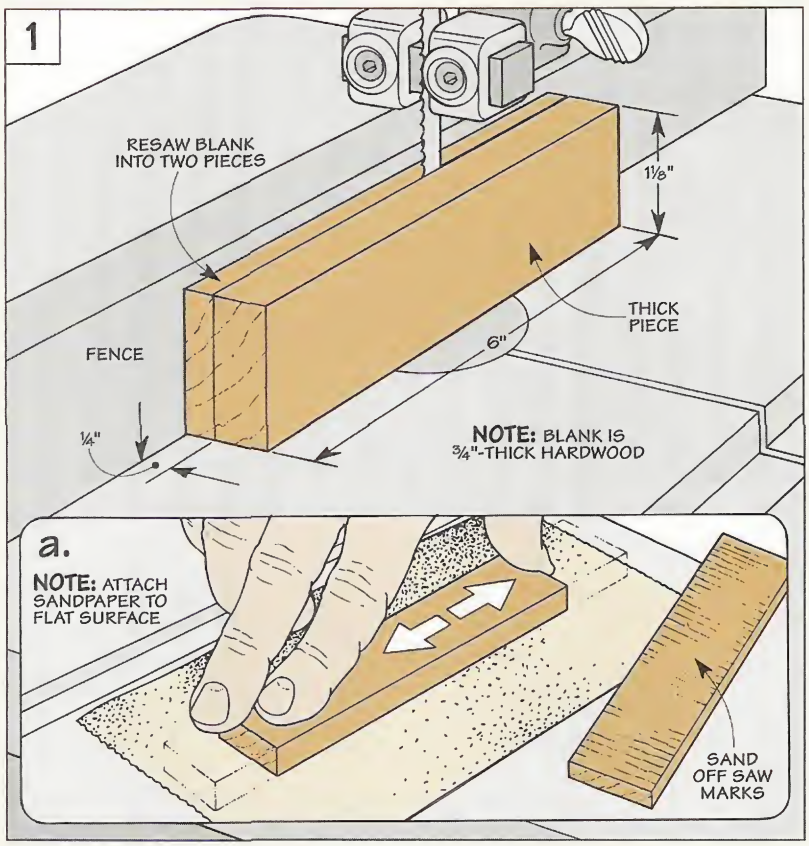

SAND FACES. After resawing the blank, the inside face of each piece may be a bit rough. Since this might keep the pieces from fitting tightly together, I sanded each one smooth, see Fig. 1a.

LAY OUT RECESS. Now you're ready to lay out the recess for the blade in the thick piece, see Fig. 2. The thing to be aware of here

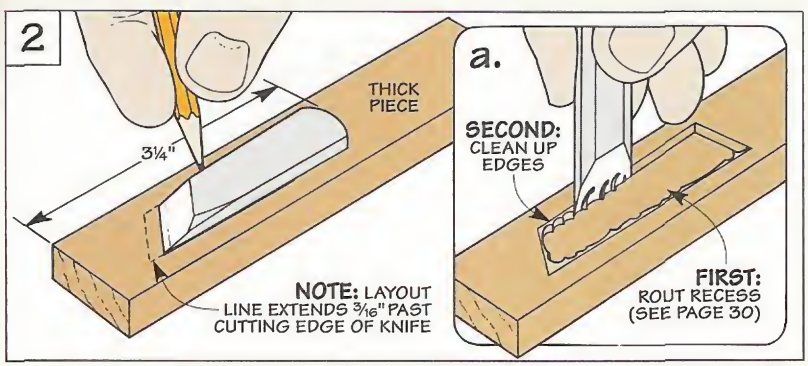

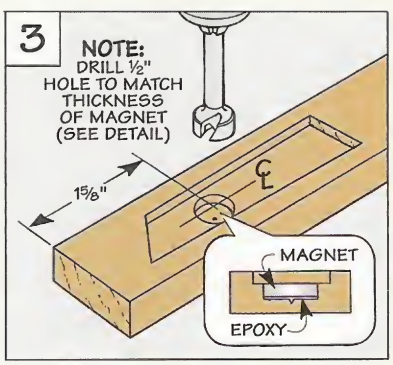

is the layout lines extend 3/16" past the cutting edge of the blade. This provides a small relief area inside the cap so it will fit down tight against the handle.

Another thing you'll notice is the blade is *wider* at the end that's opposite the cutting edge. In use, this wide end is "jammed" into the recess which keeps the blade from falling out.

To rout the recess, I used a hand-held router and a simple jig, see page 30. Then I cleaned up the edges with a chisel, see Fig. 2a.

MAGNET. After getting the blade to fit snug in the recess, I added a small magnet to keep the cap from slipping off the knife. The magnet is epoxied in a hole drilled in the bottom of the recess, see Fig. 3. Note: I used a "rare earth" magnet because it's extremely strong. (See page 31 for sources.)

CAP & HANDLE. With the magnet in place, the next step is to separate the *cap (A)* and the *handle (B)*. Since the pieces are fairly small, I temporarily carpet-taped them together and used a fine-toothed handsaw to cut them apart, see Fig. 4.

GLUE-UP. Now it's just a matter of setting the blade in the recess and gluing up the knife, see Fig. 5. Just make sure to check that the ends and edges of the pieces align. Then slip the cap off the blade to avoid accidentally gluing it to the handle, see Fig. 5a.

FINAL SHAPING. At this point, you could use the knife just as it is. But the sharp edges and square corners would dig into your hand. So you'll want to shape the knife to provide a more comfortable grip.

I started by sanding a gentle curve at each end, see Fig. 6a. Then I sanded the edges to create a slight oval shape that fits my hand like a glove, see Figs. 6 and 6b.

SAND BEVEL. Finally, to make it easy to orient the cap when slipping it onto the blade, I sanded the corner so it matches the direction of the bevel on the blade.

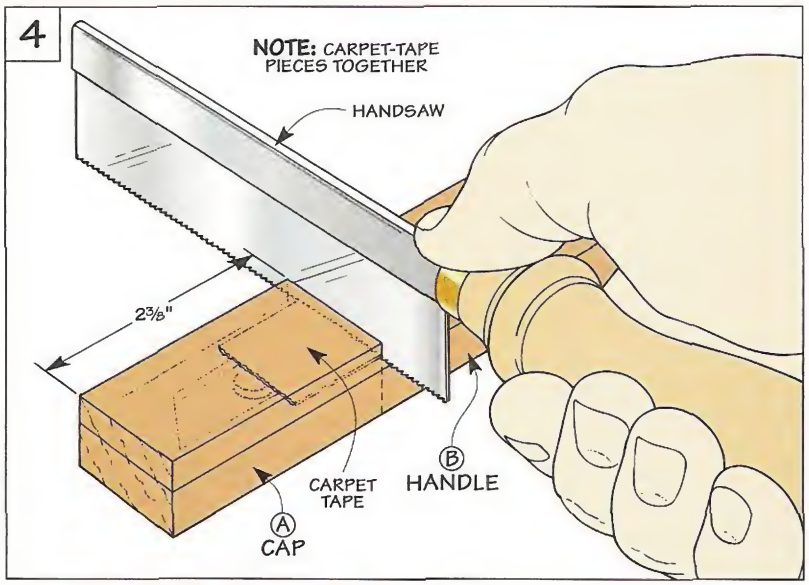

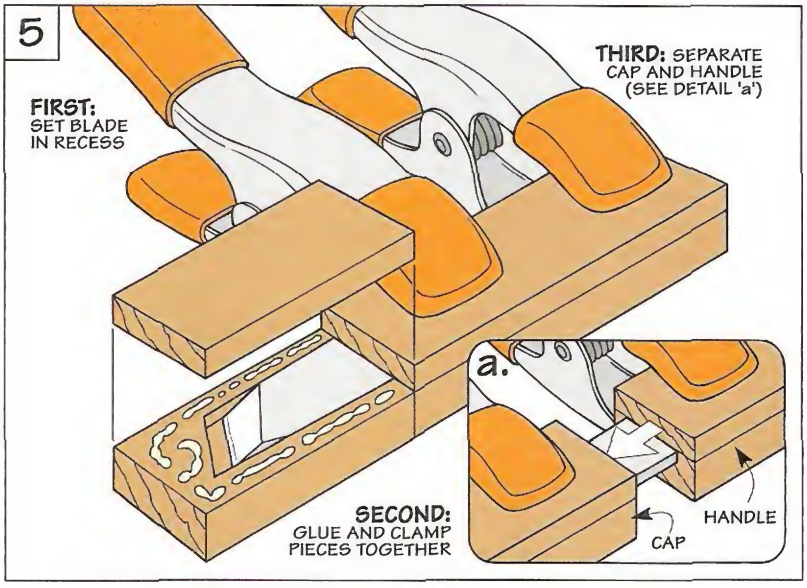

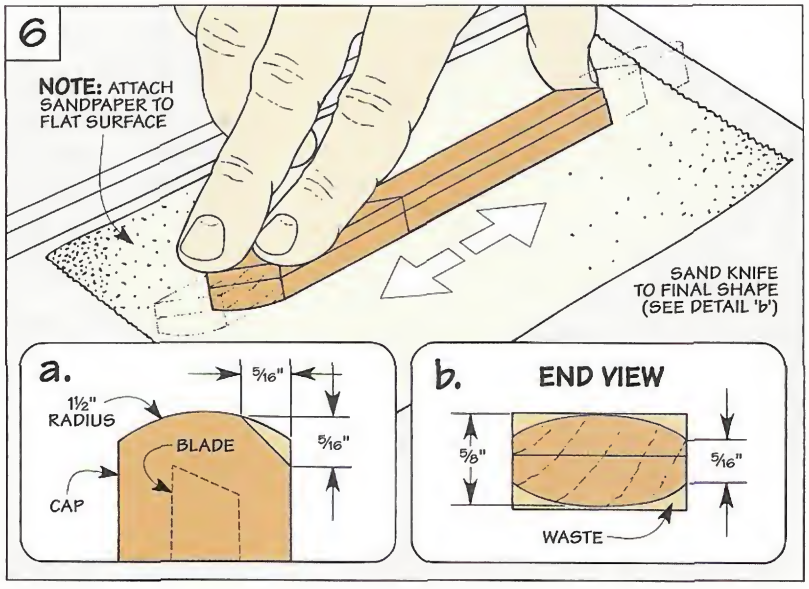

Modular Wall Storage

Storage that moves. That's the idea behind this modular wall storage system.

A while back I stopped by to visit Kent, one of our project designers. He was working in his garage on what looked like a jungle gym for his kids.

Fastened along one wall was a number of vertical 2x4 studs with horizontal rows of metal pipe (conduit) stretching between them. Kent said it was only half done, and I should come back in a couple of weeks.

When I returned, I expected to find his kids climbing all over their new jungle gym. Instead, I found a complete shop hanging from the wall.

The first thing I noticed was a handy work table with a framed pegboard panel hanging above it, see photo above. Next to these, a row of individual storage units held his portable power tools.

To create more storage, Kent added a number of wide shelves and a large tool cabinet. There was even a small case filled with pull-out bins to organize small pieces of hardware.

HANGING BRACKETS. But the most interesting thing about these storage units is they're *not* permanently attached. Instead, each one has a set of shop-made brackets that hang on the conduit, see photos at left.

MOVABLE. The nice thing about this is if your storage needs change, you simply remove one of the storage units and hang it somewhere else. Or, you can rearrange the entire storage system altogether.

CUSTOMIZED STORAGE. Another thing I like about these modular units is they make it easy to customize your own storage system. For example, you may want to build a whole wall full of shelves. Or if you have a lot of tools, you might need two cabinets. You might even want to add a storage system to other areas in the house, refer to back cover.

▲ *It's easy to hang each storage unit exactly where you want on the grid (left).The secret is a set of hanging brackets attached to the back of each unit that fit securely over the metal conduit (right).*

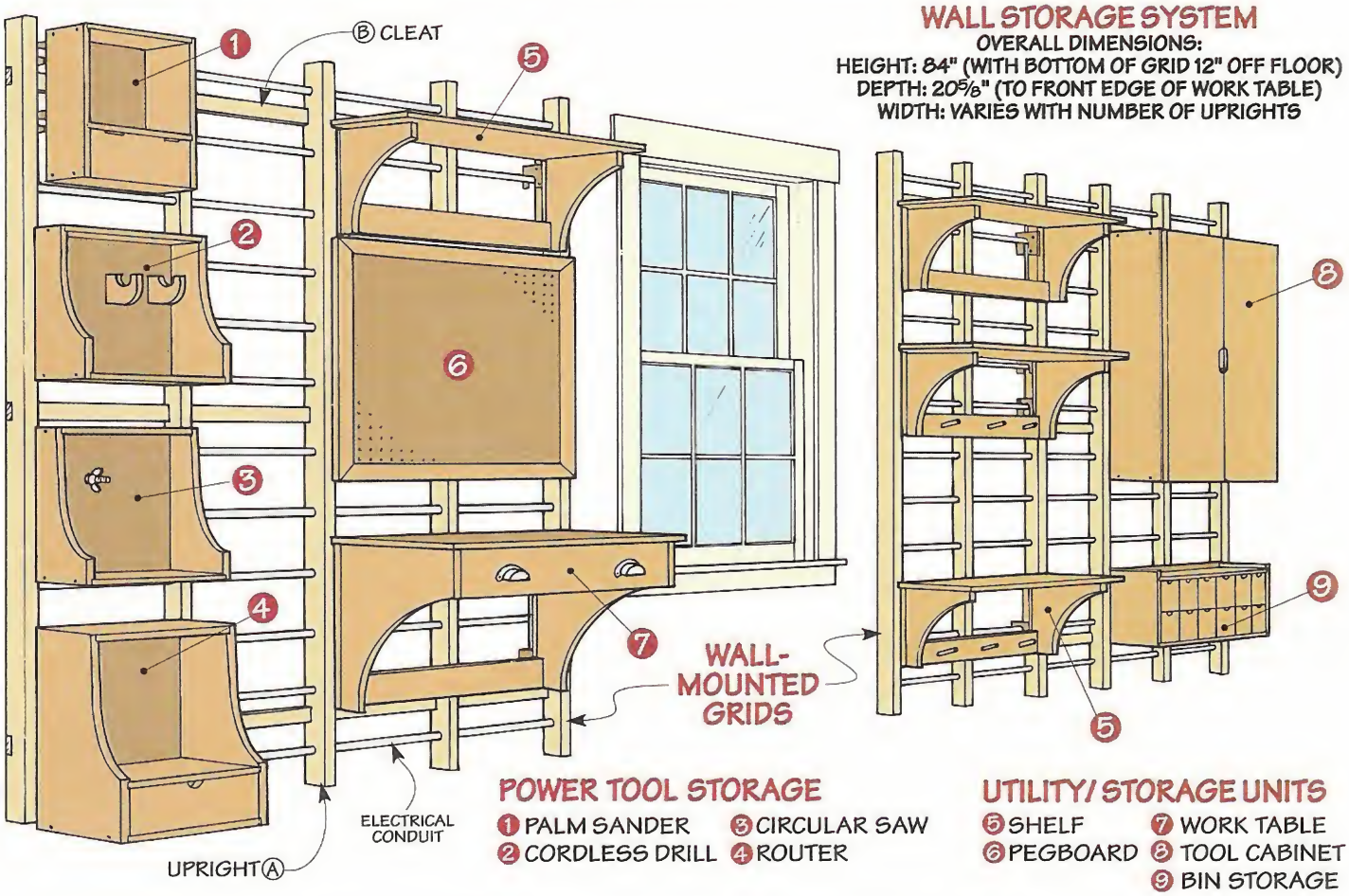

Materials

Grid System

A Uprights*	1½ x 2½ - 72
B Cleats*	¾ x 1½ - custom length
C Hanger Block*	1½ x 2½ - 10½ (short) or 16½ (long)
D Hooks*	2½ x 3 - ¼ hardboard

Tool Cabinet (requires 4 short hanging brackets)

E Top/Bottom (2)	7¼ x 29⅞ - ¾ ply.
F Sides (2)	8 x 36 - ¾ ply.
G Fixed Shelf (1)	7¼ x 29⅞ - ¾ ply.
H Back (1)	30⅜ x 36 - ¼ hdbd.
I Adjustable Shelves (2)	6¾ x 29¼ - ¾ ply.
J Shelf Edging (2)	¼ x ¾ - 29¼
K Doors (2)	15⅛ x 35¾ - ¾ ply.
L Door Edging	⅛ x ¾ (18 linear feet)
M Cabinet Edging (3)	3/16 x ¾ - 29⅜
N Bin Fronts/Backs (12)	3 15/16 x 4⅞ - ¾ ply.
O Bin Bottoms (6)	6¾ x 4⅜ - ¾ ply.
P Sides (12)	6¾ x 3 15/16 - ¼ hdbd.

Work Table (requires 2 long hanging brackets)

Q Supports (2)	16¾ x 16½ - ¾ ply.
R Stretchers (3)	3½ x 27⅛ - ¾ ply.
S Core (1)	17½ x 31 - ¾ ply.
T Cover (1)	17½ x 31 - ¼ hdbd.
U Table Edging	½ x 1 - (6 linear feet)
V Drawer Frnt./Back (2)	3 15/16 x 25⅝ - ½ ply.
W Drawer Sides (2)	3 15/16 x 16 - ½ ply.
X Drawer Bottom (1)	15½ x 25⅝ - ¼ hdbd.
Y False Front (1)	4 11/16 x 28⅝ - ¾ ply.

Bin Storage (requires 2 short hanging brackets)

Z Sides (2)	8 x 11¼ - ¾ ply.
AA Back (1)	11¼ x 30⅜ - ¼ hdbd.
BB Fixed Shelves (2)	7¼ x 29⅞ - ¾ ply.
CC Bottom (1)	7¼ x 29⅞ - ¾ ply.
DD Support Strip (1)	½ x ¾ - 30⅜
EE Bin Fronts/Backs (24)	3 15/16 x 4⅞ - ¾ ply.
FF Bin Bottoms (12)	6¾ x 4⅜ - ¾ ply.
GG Bin Sides (24)	6¾ x 3 15/16 - ¼ hdbd.

Pegboard Storage (requires 2 long hanging brackets)

HH Pegboard Panel (1)	22⅝ x 30⅜ - ¼ pegboard
II Rails (2)	1½ x 1½ - 31⅞
JJ Stiles (2)	1½ x 1½ - 24⅛

Shelf (requires 2 short hanging brackets)

KK Supports (2)	11¼ x 10½ - ¾ ply.
LL Stretcher (1)	3½ x 27⅛ - ¾ ply.
MM Shelf (1)	11½ x 31 - ¾ ply.
NN Shelf Edging	½ x 1 (5 linear feet)

*Number of uprights, cleats, hanger blocks, and hooks will vary depending on the size of your grid and number of storage units.

Grid

▲ *All it takes to "erase" the black print on the conduit is to wipe it off with lacquer thinner.*

The backbone of this storage system is a grid that attaches to the wall. It consists of a number of vertical uprights with horizontal rows of metal conduit running between, see drawing.

UPRIGHTS. To provide plenty of support for the conduit, the *uprights (A)* are located at 16" increments (like wall studs). Each upright is made from "two-by" material that's ripped to a width of 2½". (I used Douglas fir.)

NOTCHES. To accept a set of cleats (added later), the next step is to cut three notches in the back edge of each upright. An easy way to ensure that these notches all align is to first clamp the uprights together, see Fig. 1. Then clamp a guide to the uprights and use a router with a straight bit to cut the notches.

Since you're removing quite a bit of material, it's best to rout one side of the notches by making a series of passes, lowering the bit between each one. To increase the width of the notches, move the guide in several small increments and make a full-depth pass at each setting.

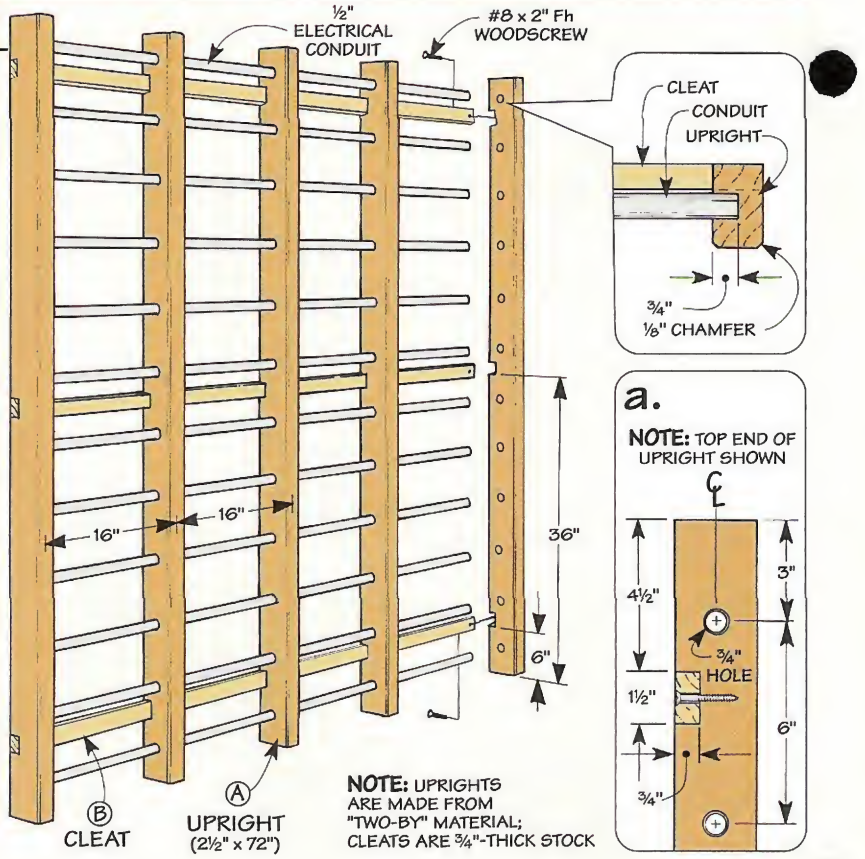

DRILL HOLES. Next, you'll need to drill a series of holes in each upright to accept the conduit, see detail 'a' above. To simplify the assembly of the grid, these holes are slightly *larger* than the conduit. I used ½" electrical conduit that has an outside diameter of 11/16". So I drilled ¾"-dia. holes.

One thing to be aware of here is the holes in the outer uprights don't go all the way through, see detail in drawing above. These

INSTALLING THE GRID

1 *A long strip of wood that's temporarily screwed to the wall provides a convenient support as you raise the grid. Just be sure it's level, see inset.*

2 *After checking that the uprights are level and plumb, attach the grid by driving screws through the cleats and into the wall studs.*

holes form pockets for the ends of the conduit which keeps it from moving from side to side.

CLEATS. To prevent the grid from racking, I added three narrow *cleats (B)* that fit into the notches in the uprights. Besides adding extra rigidity, these cleats are used to mount the grid to the wall.

To determine the length of the cleats, arrange the uprights on the floor like they'll be in the final grid. Then measure the total width of the grid and cut the cleats to length.

CONDUIT. Before attaching the cleats, you'll need to cut the conduit to length (1½" shorter than the cleats) and feed it through the inner uprights. After capping the ends of the conduit with the outer uprights, you can glue and screw the cleats in place.

MOUNT GRID. Now you're ready to mount the grid to the wall. The size of the grid may make it awkward to handle. But a temporary wall cleat will simplify the installation, see photos on page 18.

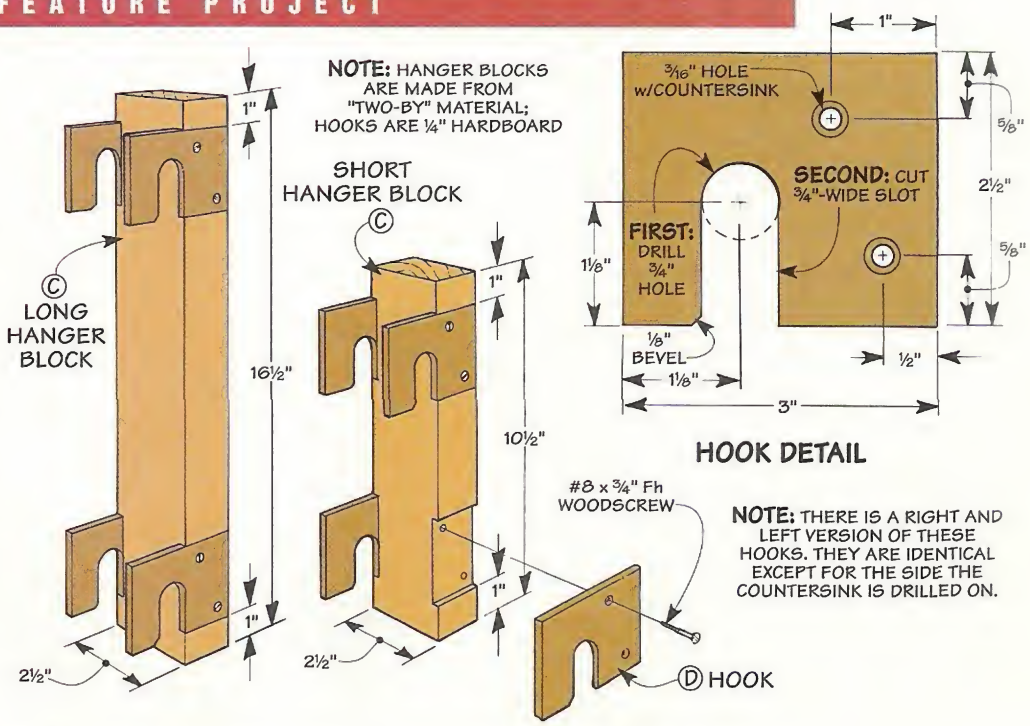

HANGING BRACKETS. With the grid in place, you can turn your attention to the hanging brackets that support the storage units. Depending on the unit, there are *two* different lengths of brackets, see drawing above. But aside from that, each one is the same.

A hanger block made from "two-by" material attaches to the back of each unit. And a set of four hardboard hooks fit over the conduit on the grid.

When making these parts I used a couple of "mass production" techniques. Not just because its quicker. But because it ensures that all the parts are uniform.

HANGER BLOCKS. Take the *hanger blocks (C)* for instance. There's a pair of notches in each edge to accept the hooks. And each notch starts 1" in from the end, see Fig. 2. So to make these cuts accurately, I used the rip fence on the table saw as a stop.

HOOKS. It's just as important that the *hooks (D)* are the same size and shape. Especially the slots in the hooks that fit over the conduit.

So I used an old trick when drilling the holes that form the ends of the slots, see margin. Then I completed the slots using a simple jig for the table saw, refer to Shop Solutions on page 30.

Now all that's left is to glue and screw the hooks into the notches in the hanger blocks.

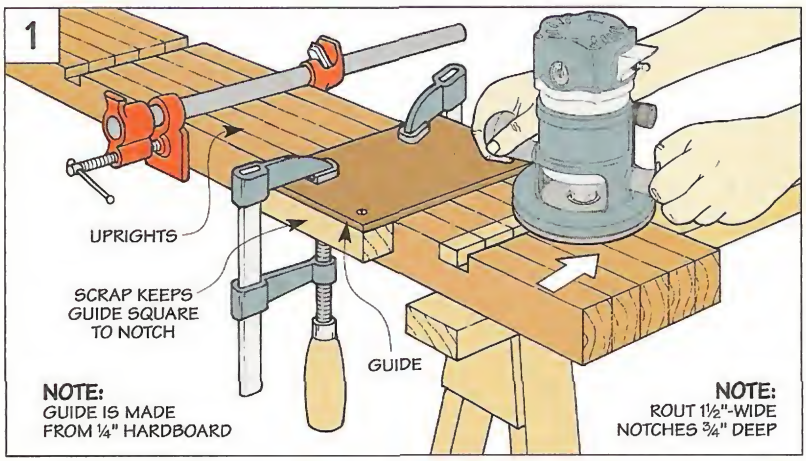

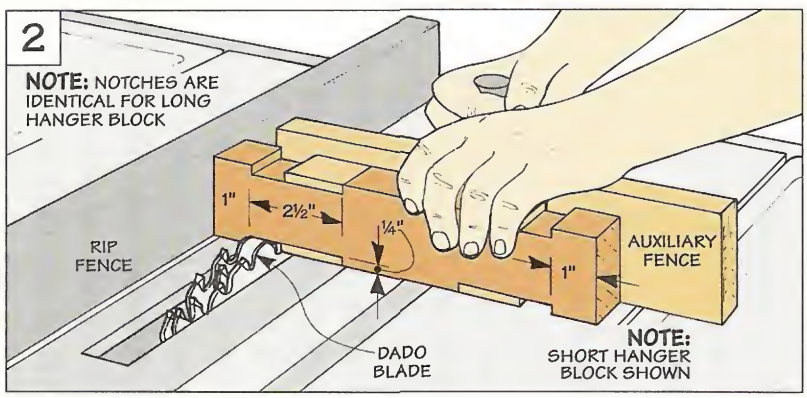

A framing square clamped to the drill press table makes it easy to position the hooks quickly and accurately when drilling holes for the slots.

FEATURE PROJECT

Tool Cabinet

The tool cabinet is the largest of the storage units. With three shelves, there's plenty of room for tools and supplies, see photo. And a row of bins at the bottom is ideal for organizing small parts and pieces of hardware.

Because of its size, it's a good idea to build the cabinet first. Once it's hung on the grid, you can position all the other storage units around it.

CASE. I began work on the cabinet by making an open plywood case that's held together with simple rabbet joints, see Fig. 3. (I used ¾" birch plywood).

To accept the *top* and *bottom (E)* of the case, the *sides (F)* are rabbeted at each end, see Fig. 3a. You'll also need to rabbet the back edge of each side for the back of the cabinet and the hanging brackets.

In addition to the rabbets, there's a dado near the bottom of each side to hold a *fixed shelf (G)*, see Fig. 3e. Also, it's easiest to drill holes now to accept the shelf supports that are added later, see Figs. 3 and 3d.

ASSEMBLY. At this point, you're ready to assemble the case. It's held together with glue and screws. To help square up the case during the glue-up, I cut a ¼" hardboard *back (H)* to fit and nailed it in place, see Fig. 3b.

SHELVES. All that's left to complete the case is to add two *adjustable shelves (I)*. After cutting these shelves to length to allow ⅛" clearance, I glued a ¼"-thick strip of hardwood *edging (J)* to the front of each one, see Fig. 3c. This creates a durable edge that's not as likely to chip as an exposed plywood edge.

DOORS

With the case complete, I added a pair of doors. These are just plywood panels "wrapped" with hardwood edging, see Fig. 4.

The *doors (K)* lay completely over the front of the cabinet. So the easiest way to determine the size of the doors is to measure the case. Just be sure to allow for an ⅛" clearance between the doors and the ⅛"-thick *edging (L)* that runs all the way around.

PULL. After gluing on the edging, I cut an opening centered on the inside edge of each door to act as a pull, see Fig. 4d. Once the edges of these openings are sanded smooth, it's just a matter of attaching the doors.

HANG DOORS. The doors are hung with piano hinges, see Fig. 4b. The only problem is the thickness of the hinges creates a gap between the doors and the cabinet. So to fill the gap (and cover the plywood edges), I glued on three strips of 3/16"-thick hardwood *edging (M)*, see Fig. 4.

Hardware

- (2) 1½" x 36" Piano Hinges
- (4) 7/16" Magnetic Catches w/Strike Plates & Screws
- (150) 1" Brads
- (8) #8 x 2" Fh Sheet Metal Screws
- (8) #8 x 1½" Fh Woodscrews
- (32) #8 x ¾" Fh Woodscrews
- (8) ¼" Shelf Supports

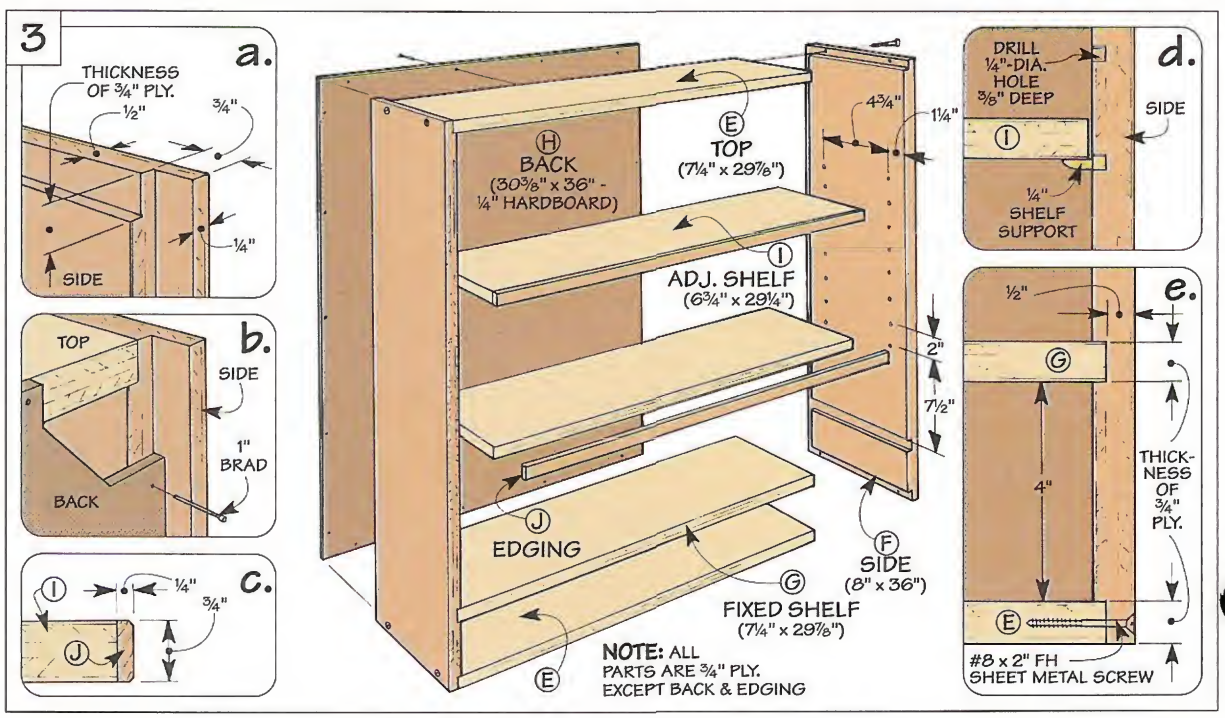

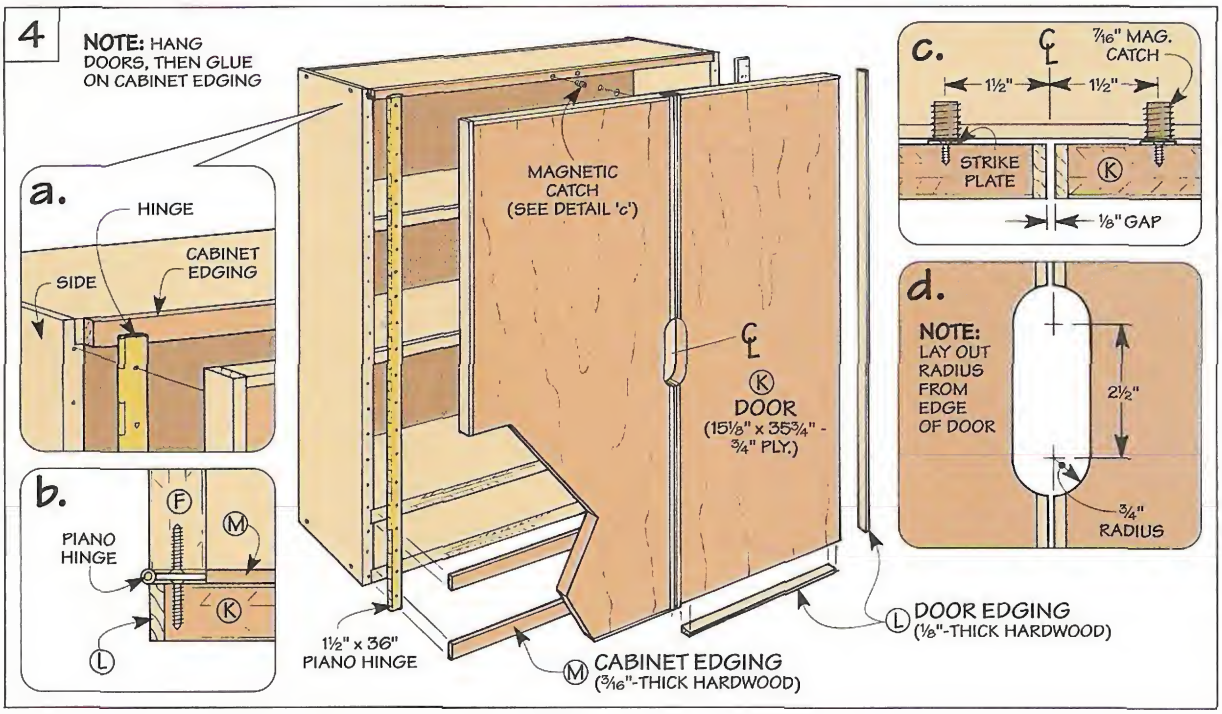

CATCHES. To keep the doors tightly closed, I added magnetic catches to the top and bottom of the case and installed strike plates in each door, see Fig. 4c.

HANGING BRACKETS. Once the cabinet is filled with tools, it's going to be quite heavy. To support this weight, I attached four short hanging brackets to the back, see Fig. 5 and page 19. These brackets are glued and screwed ¾" from the top and bottom of the cabinet and tight against the sides, see Fig. 5a.

BINS

To keep small parts organized, I added six pull-out bins at the bottom of the cabinet, see Fig. 6.

Each bin consists of a ¾"-thick plywood *front/back (N)* and *bottom (O)*, and a pair of ¼" hardboard *sides (P)*, see Fig. 6.

Cutting a half-circle in the front piece is all that's needed as a pull, see Fig. 6a. Then all of the bin parts are assembled with rabbet joints, glue, and brads, see Figs. 6b and 6c.

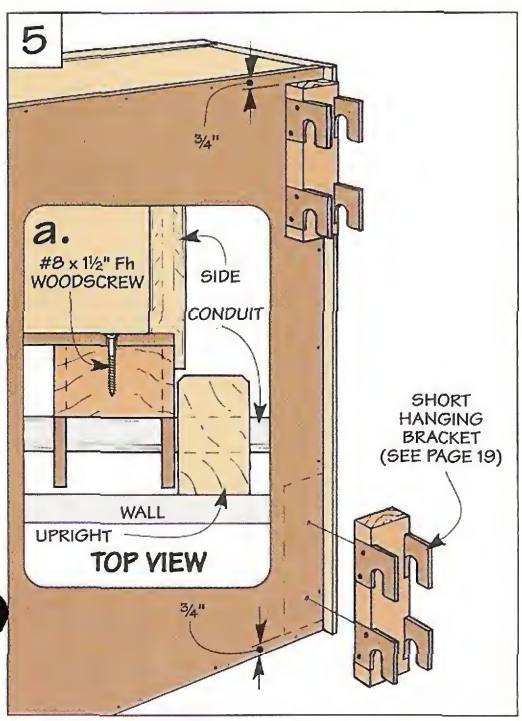

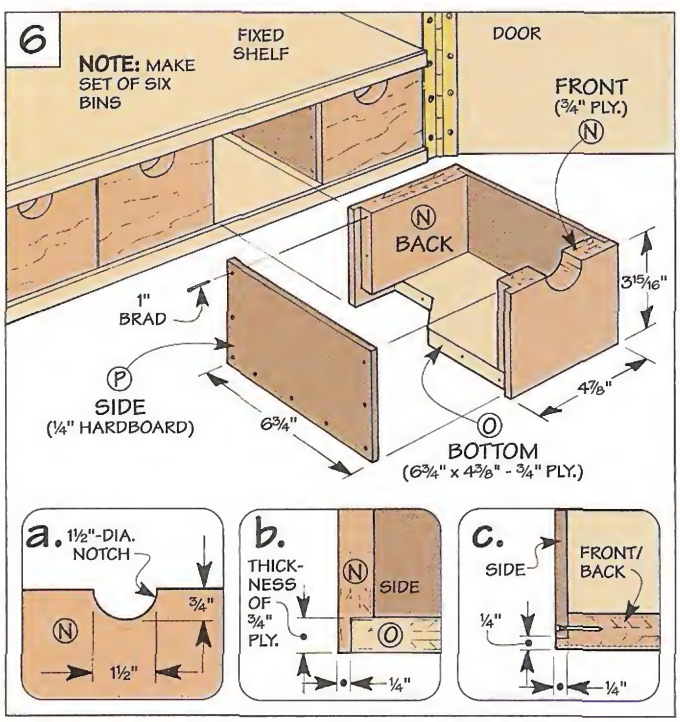

Work Table

This work table is a perfect place to sketch out a drawing, spread out a plan, or tackle a small project. And when you're ready to close up shop for the day, there's a drawer underneath that provides a convenient place to hold tools and supplies, see photo.

SUPPORTS. To provide a sturdy work surface, the table is held up by two matching *supports (Q)*. These are just pieces of ¾" plywood that are cut and sanded to a gentle curve, see Fig. 7 and the pattern below.

HANGING BRACKETS. The supports are attached to a pair of hanging brackets. But this time, I used the long (16½") brackets to provide extra strength.

In addition to the length of these brackets, there's one other difference. To accept the supports, a ½"-deep groove is cut in each hanger block. After fitting the supports into these grooves, they're simply glued and screwed in place, see Fig. 7a.

STRETCHERS. To add rigidity to the table, I added three *stretchers (R)* that bridge the supports. One of them is screwed to the bottom of the supports. The other two are screwed flush with the top edge of the supports.

TOP. At this point, work can begin on the table top. It's made up of two separate layers. A plywood core creates a flat, stable base, see Fig. 8. And a hardboard cover provides a smooth, durable work surface.

An easy way to get the edges of these pieces perfectly aligned is to cut the plywood *core (S)* to final size first. Then, after gluing on a slightly oversize *cover (T)*, trim the overhanging edges with a flush trim bit and handheld router.

EDGING. The edges of the table top are bound to get nicked up

Hardware

- (12) #8 x 2¼" Fh Sheet Metal Screws
- (4) #8 x 3" Fh Sheet Metal Screws
- (6) #8 x 1½" Fh Sheet Metal Screws
- (16) #8 x ¾" Fh Woodscrews
- (2) #8 x 2½" Fh Sheet Metal Screws
- (4) #8 x ½" Fh Sheet Metal Screws
- (2) Nickel-Plated Drawer Pulls
- (16) 1" Brads
- (1 Pr.) 16" Full-Ext. Drawer Slides

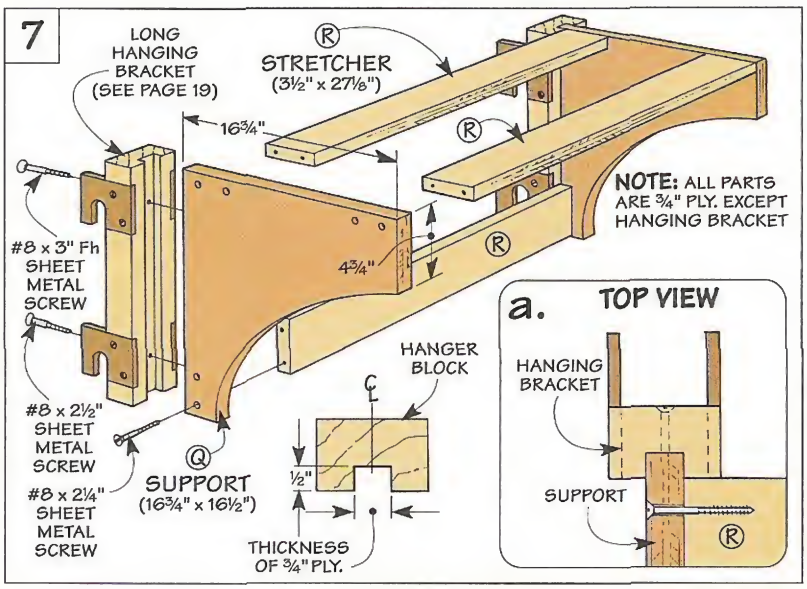

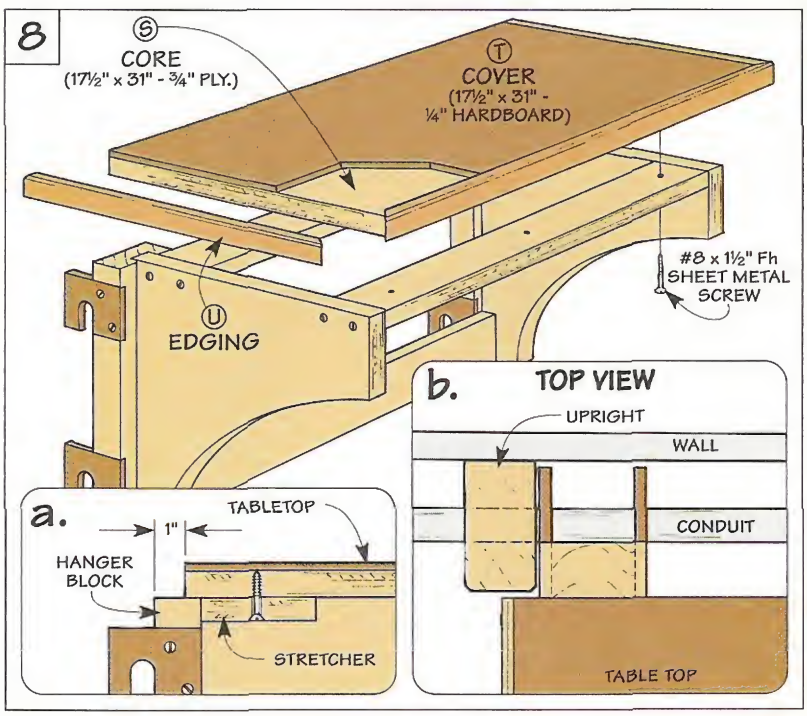

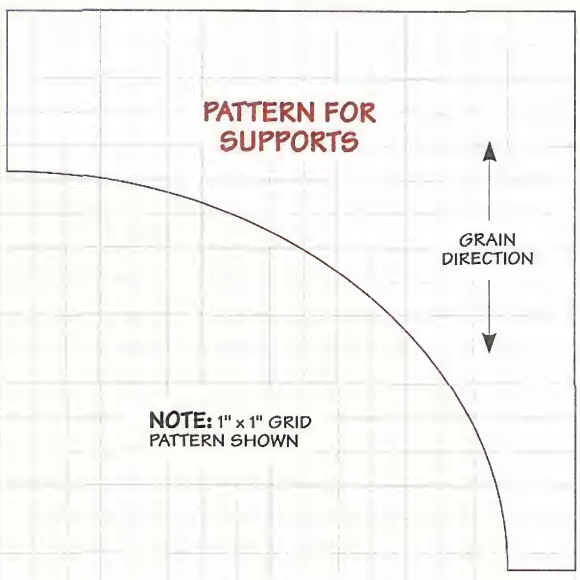

with use. So I added ½"-thick strips of hardwood *edging (U)* to protect the ends and the front edge, see Figs. 8 and 10a. These strips are mitered to length to fit around the table top. Then they're simply glued in place.

ATTACH TABLE TOP. Now you can attach the table top. It's centered over the supports, 1" from the back edge of the hanger blocks, see Fig. 8a.

This way, the back of the table top won't hit the uprights as it hangs on the grid, see Fig. 8b. Once the top is positioned on the supports, it's secured with screws that pass through countersunk shank holes drilled in the bottom of the stretchers.

DRAWER

The space under the table top provides a perfect place to add a large drawer. For easy access to the stuff that "migrates" to the back corners, I mounted the drawer on full-extension slides.

Note: To help determine the overall size of the drawer, you'll need to have your slides in hand *before* building the drawer.

The drawer is quite simple. The front, back, and sides are all made from ½" plywood and joined with rabbet joints, see Fig. 9.

Each of these drawer pieces is the same width (3 15/16"). But to determine their final length, you have to figure out the overall width of the drawer.

To do this, measure the distance between the supports (27⅛" in my case). Then subtract the combined thickness of the slides (1"). Once you know the overall width, cut the *front* and *back (V)* of the drawer ½" *shorter* to allow for the rabbets. Then cut the *sides (W)* 16" long.

JOINERY. Once all the drawer parts are cut to final size, it's just a matter of rabbeting both ends of each side to accept the front and back, see detail in Fig. 9.

Before assembling the drawer, you'll need to cut a groove near the bottom of each piece for the hardboard *bottom (X)*, see Fig. 9a. Then glue and nail the drawer together.

FALSE FRONT. To complete the drawer, I added a *false front (Y)*, see Fig. 10. This is a piece of ¾" plywood that's cut to size so it covers the front edge of the supports (Q) and the front stretcher (R) Note: To provide clearance under the table top when you open and close the drawer, the false front is 1/16" shorter (4 11/16") than the front of the supports.

PULLS. After attaching the false front with screws, I added two nickel-plated drawer pulls. Each pull is mounted with two short screws.

INSTALL SLIDES. Finally, all that's left is to install the drawer slides, see Fig. 10a. Here, it's best to follow the instructions that came with your drawer slides.

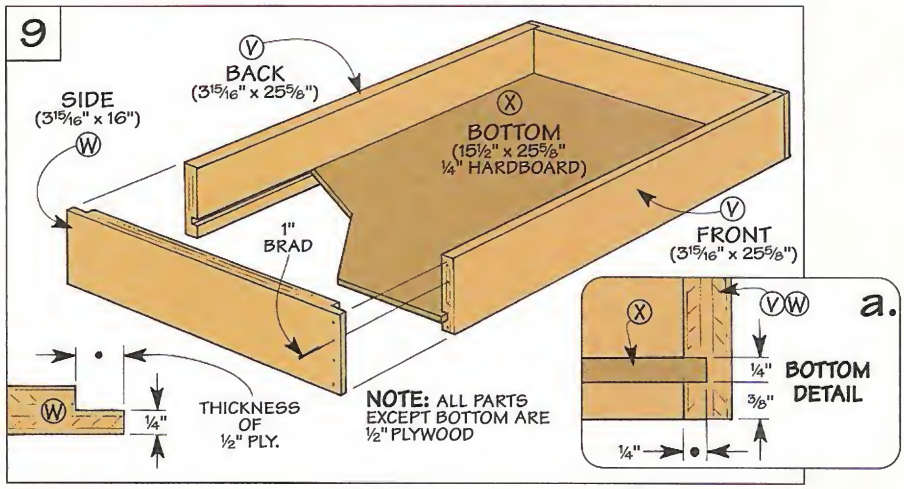

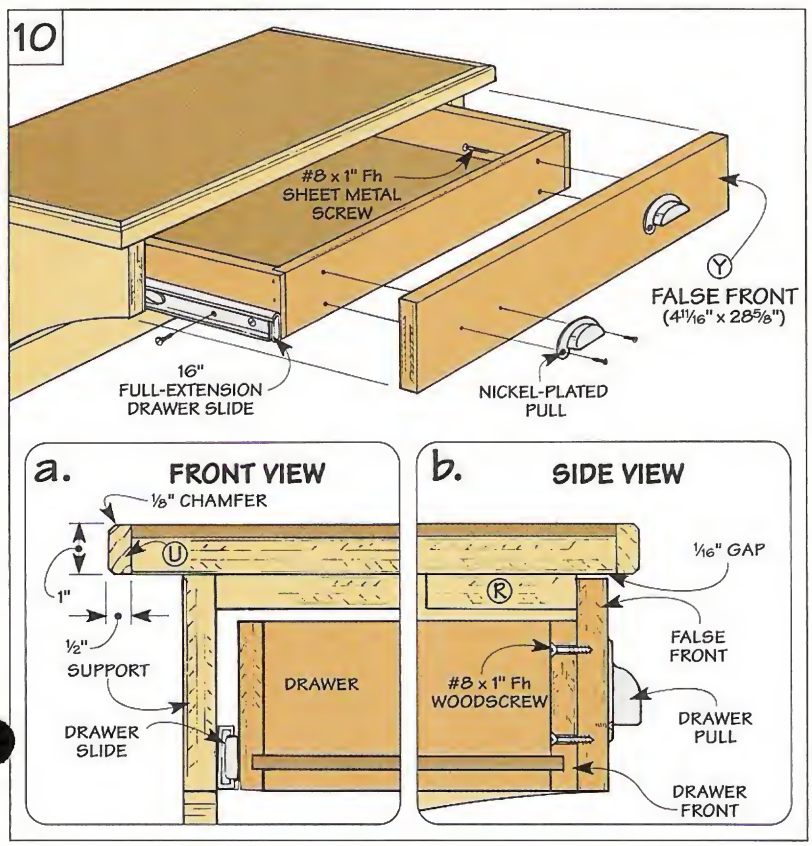

Bins

Hardware

- (12) #8 x 2" Fh Sheet Metal Screws
- (4) #8 x 1½" Fh Woodscrews
- (16) #8 x ¾" Fh Woodscrews
- 1" Brads

If you need extra storage bins, this small case is just the ticket. It houses a dozen bins that are identical to the ones in the cabinet.

The construction of the case is similar to the cabinet. But here, the *sides (Z)* and *back (AA)* extend *above* the case, see drawing below and detail 'a'. This creates a storage tray on top, see photo.

The openings for the bins are formed by two *fixed shelves (BB)* and the *bottom (CC)* of the case. These pieces fit in dadoes and rabbets that are the same as those in the cabinet.

SUPPORT STRIP. To add rigidity where the back sticks up above the case, I glued a *support strip (DD)* behind it, see detail 'b'.

HANGING BRACKETS. Finally, a pair of short hanging brackets supports the case on the grid.

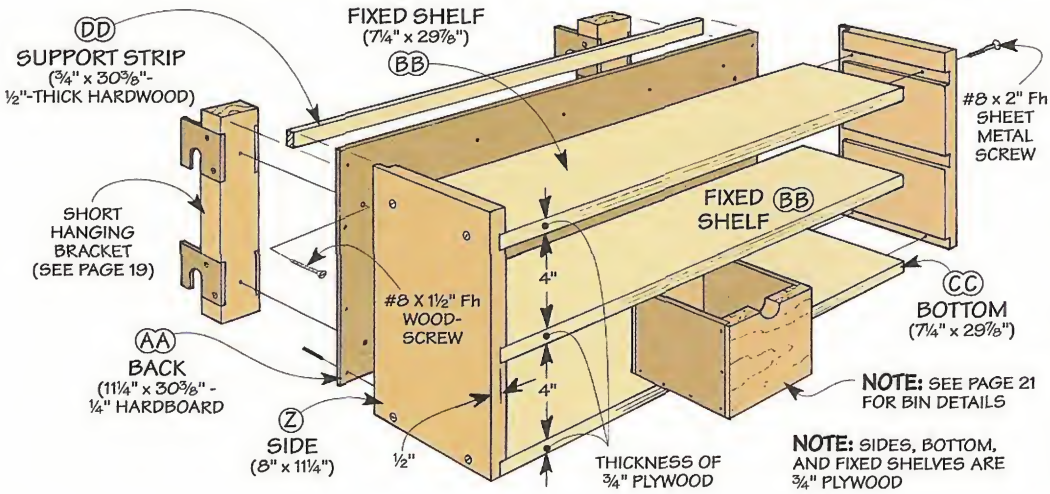

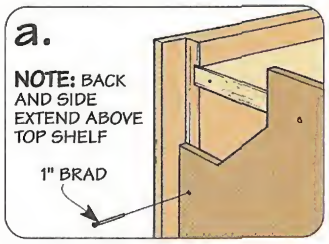

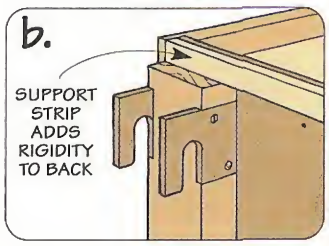

Pegboard Storage

▲ To add a bulletin board to the grid, simply glue a sheet of cork to a hardboard panel and surround it with a frame.

A wall storage system wouldn't be complete without a place to hang tools. So I added this pegboard storage unit, see photo at right.

PEGBOARD. Basically, it's just a *pegboard panel (HH)* surrounded by a wood frame, see drawing. The pegboard is cut to size so the centerpoints of the holes are ¼" in from each edge, see detail. Once the project is assembled, this will provide even spacing between the holes and the frame.

FRAME. After cutting the pegboard to size, I built a mitered frame to fit around it. It consists of two *rails (II)* and two *stiles (JJ)* made from "two-by" material. (I used Douglas fir.)

To accept both the pegboard and a pair of long hanging brackets, you'll need to cut a rabbet in the back of each frame piece, see detail 'a.'

HANGING BRACKETS. An easy way to mount the brackets is to first countersink the pre-drilled holes in the pegboard. Then just screw the pegboard in place.

Hardware

- (8) #8 x 2" Fh Woodscrews
- (16) #8 x ¾" Fh Woodscrews
- (6) #8 x 1¼" Fh Woodscrews

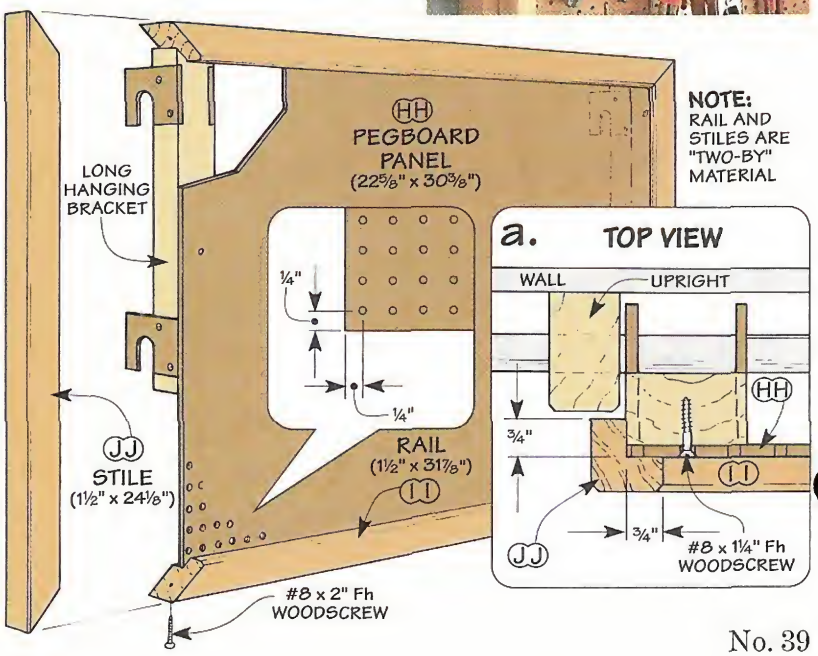

Shelves

One of the things we wanted to include in this wall storage system was a number of deep shelves. The shelf shown here is 12" deep — deep enough to hold paint cans, jigs, or toolboxes.

Note: If you plan on hanging a shelf next to the tool cabinet, you'll want to make that shelf (and its supports) narrower to allow the cabinet door to swing open. This is marked on the pattern shown below.

SUPPORTS. Like the work table, each shelf is held up by two plywood *supports (KK)*, see Fig. 11 and pattern below. As before, these supports fit in grooves cut in the hanger blocks. But this time I found that the short hanging brackets are all that are needed to hang the shelf securely on the grid.

STRETCHER. After attaching the supports with glue and screws, the next step is to add a single *stretcher (LL)*. It acts as a stiffener. But installing a few pegs makes it an ideal place to hang power cords or clamps, see photo in margin at right.

When determining the length of the stretcher, keep in mind that it has to allow the hanging brackets to fit between two uprights. I cut the stretcher 27⅛" long and then screwed it to the supports, see Fig. 11a.

SHELF. Now you're ready to add the *shelf (MM)*, see Fig. 12. It's a piece of ¾" plywood trimmed with strips of solid wood *edging (NN)* on the front and ends, see Fig. 12b.

After mitering each strip to length, it's glued flush with the top of the shelf. Chamfering the top and bottom edges of the strips will help prevent them from chipping.

ATTACH SHELF. The last step is to attach the shelf to the supports. What works well here is to first hang the brackets on the grid. After centering the shelf on the supports, position it so it's set in 1" from the back edge of the hanger block, see Fig. 12a. Then screw it in place.

Hardware

- *(10) #8 x 2" Fh Sheet Metal Screws*
- *(4) #8 x 2¼" Fh Sheet Metal Screws*
- *(16) #8 x ¾" Fh Woodscrews*
- *½" Hardwood Dowels (optional)*

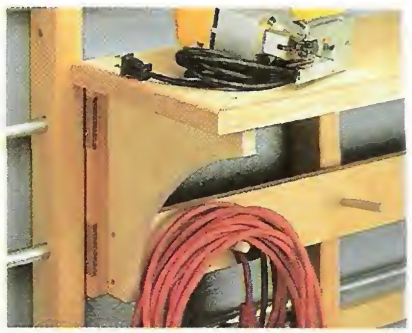

▲ *To provide storage under the shelf, glue dowels into angled holes drilled in the stretcher.*

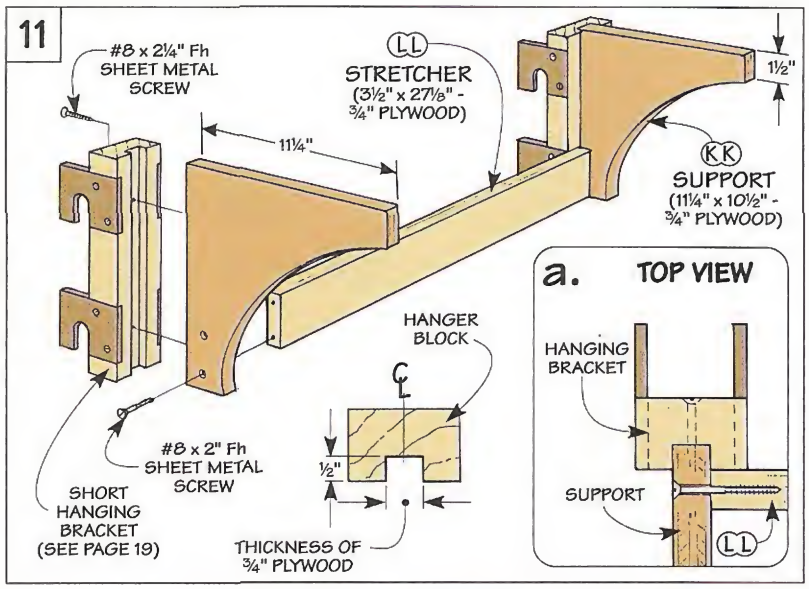

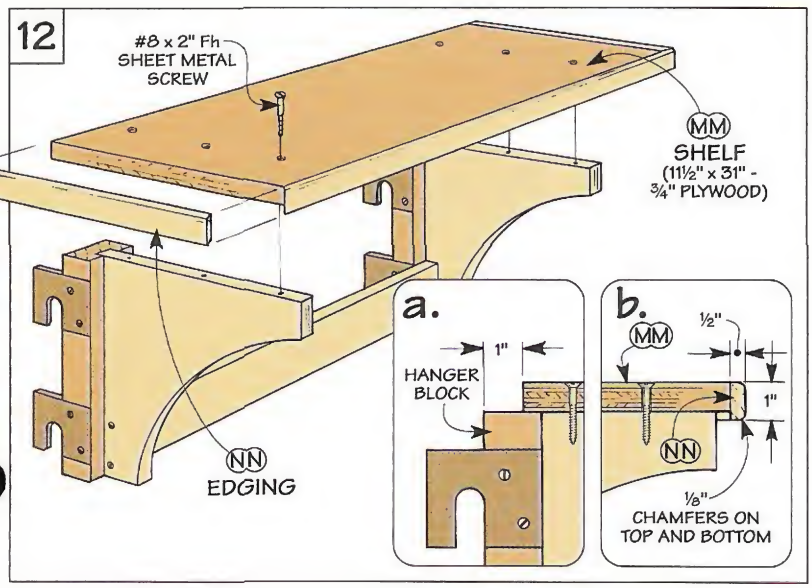

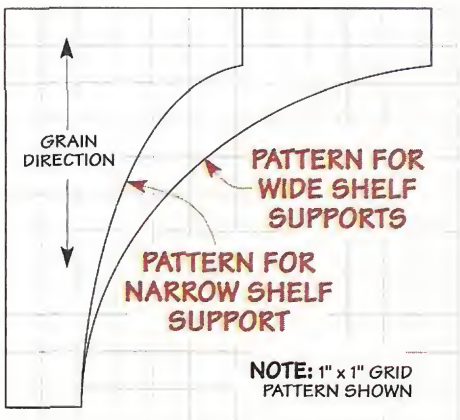

Portable Power Tool Storage

When I'm ready to work on a project, it's nice to have my portable power tools where I can grab them easily and put them to use — not hidden away in a box or cabinet. So I decided to build separate storage units for four of my portable power tools, see photo at right.

Each of these storage units is designed to hang on the grid shown on page 18. And they all use the same type of hanging brackets, refer to page 19. So you can arrange the storage units on the grid (or rearrange them) any way you like.

Circular Saw

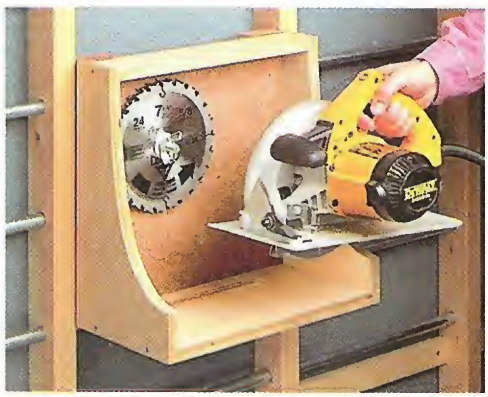

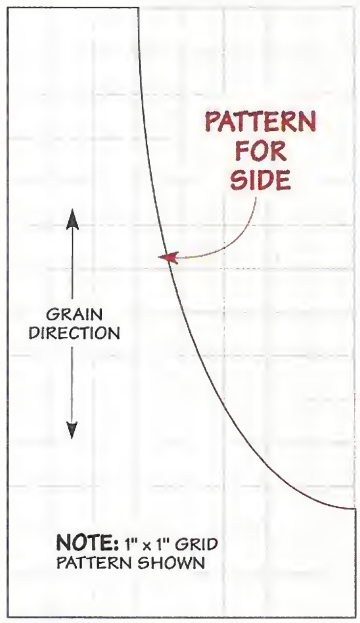

Since the blade of a circular saw is usually extended *below* the base of the saw, storing it can be a problem. So this storage unit has a slot in the bottom that accepts both the blade and the guard of a circular saw, see photo.

The construction of this unit is similar to the other cabinets. The *sides (A)* are rabbeted to accept a narrow *top (B)* and a wide *bottom (C)*, see Figs. 1 and 1b. And as before, a rabbet accepts the *back (D)* and a short hanging bracket, see Figs. 1a and 2.

CURVED PROFILE. But there is one thing that's different about this storage unit. To make it easy to grab the saw, I cut a sweeping curve in the sides, see pattern above and Fig. 1.

CUT SLOT. In addition to the curved sides, you'll also need to cut the slot in the bottom (C) for the blade and guard to fit through. To determine the size of this slot, lower the saw blade all the way and measure the opening required. (You may want to cut a test slot in a scrap piece first.)

BLADE STORAGE. Another thing that's handy about this unit is it provides storage for extra saw blades as well. These blades slip over a bolt that passes through a hole drilled in the back (D), see Fig. 1.

ASSEMBLY. Now it's just a matter of gluing and screwing the sides to the top and bottom. Here again, the back is glued and tacked in place with brads. And two short hanging brackets are attached to the back, see Fig. 2.

Hardware

- (6) #8 x 2" Fh Sheet Metal Screws
- (4) #8 x 1½" Fh Woodscrews
- (16) #8 x ¾" Fh Woodscrews
- (1) ½" x 2" Bolt
- (1) ½" Lock Nut
- (1) ½" Wing Nut
- 1" Brads

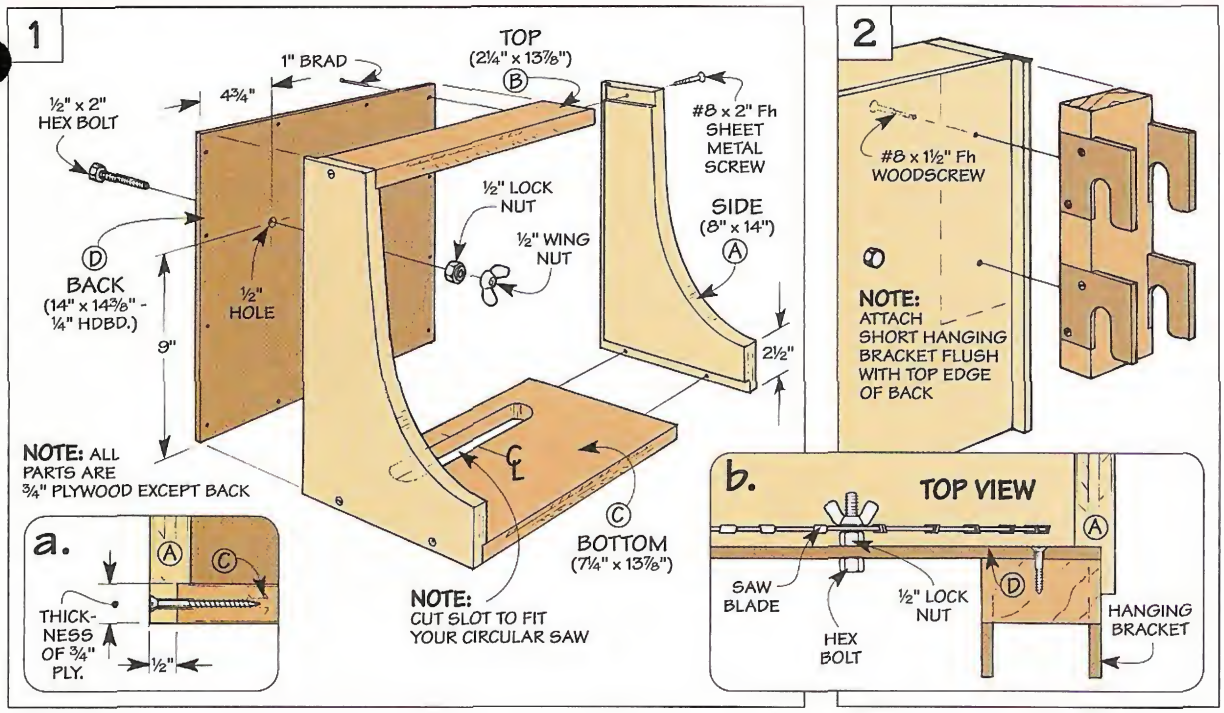

Cordless Drill

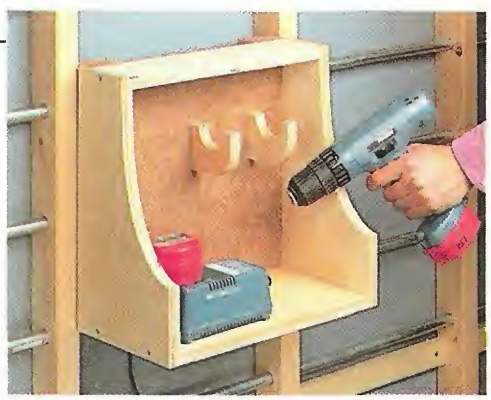

My cordless drill is one tool I like to have handy — and charged up. So I decided to build a storage unit big enough to hang the drill *and* hold the battery charger.

Here again, the *top (E)* and *bottom (F)* fit in rabbets in the *sides (G)*, see Fig. 3. And there's a curved "scoop" in the sides, see pattern below.

But this time, the front edge is taller so it matches the height of my charger. Also, I drilled a hole in the *back (H)* for the power cord on the charger to pass through.

CRADLES. The drill hangs on two plywood *cradles (I)* screwed to the back, see Fig. 3a. As before, cut a scrap first to see if the body of the drill fits in the cradles.

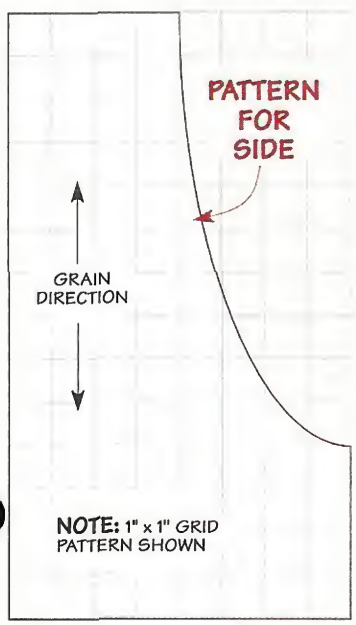

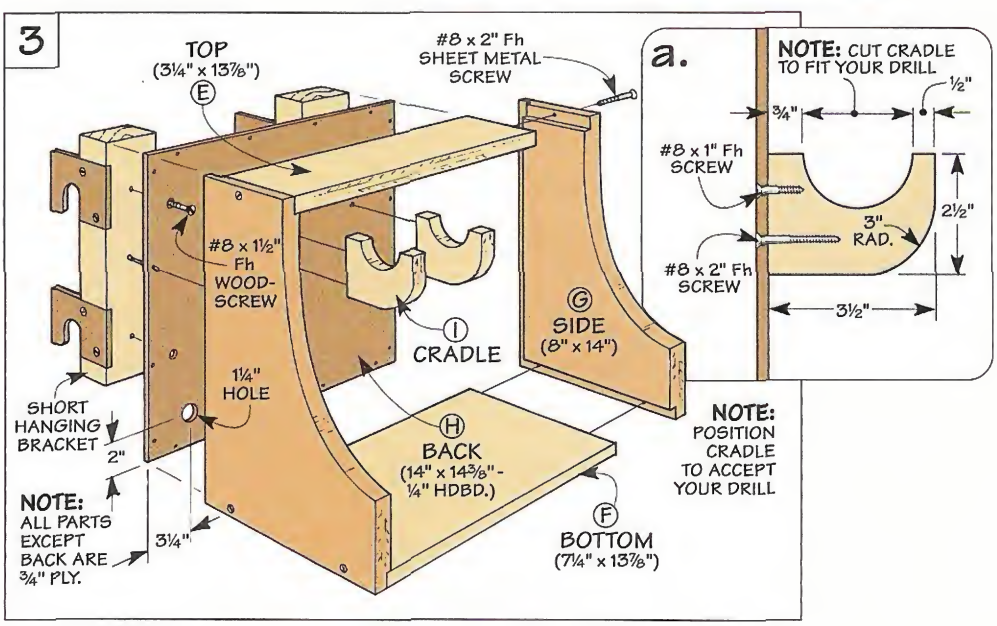

Router

▲ *Nylon sleeves make it easy to slip router bits in and out of the drawer.*

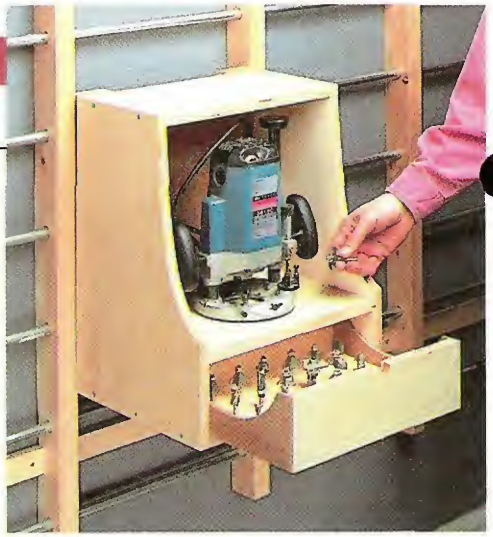

This storage unit provides a handy place to set my router. But what I like even better is the drawer underneath that lets me safely store my router bits, see photo at right.

To hold even a large plunge router, this storage unit is a bit deeper and taller than the other units. But aside from that, the basic design is almost the same.

The *sides (J)* are rabbeted at each end to accept the *top (K)* and *bottom (L)*, see Fig. 4. And a rabbet in the back edge holds the hardboard *back (M)* and a pair of short hanging brackets.

SHELF. But one difference in this storage unit is there's a dado in each side to hold a *shelf (N)*, see Fig. 4a. Besides supporting the router, the shelf forms an opening for the drawer.

CURVED PROFILE. All that's left to do before assembling this unit is to cut a curved profile on the front edge of each side, see patttern below.

DRAWER. Now you're ready to add the drawer that holds the router bits. It's a simple box that fits the opening at the bottom of the storage unit.

The *front* and *back (O)* of the drawer are just pieces of ¾" plywood, see Fig. 5. A deep rabbet holds the *bottom (P)* of the drawer, see Fig. 5a. And shallow rabbets on each end accept the hardboard *sides (Q)*, see Fig. 5b. These sides are dished out along the top edge to make it easy to remove a bit (or put one back).

NYLON SLEEVES. To hold the bits, I used nylon sleeves that I picked up at the hardware store, see photo in margin. The sleeves are glued into holes in the drawer bottom. (I used "instant" glue.)

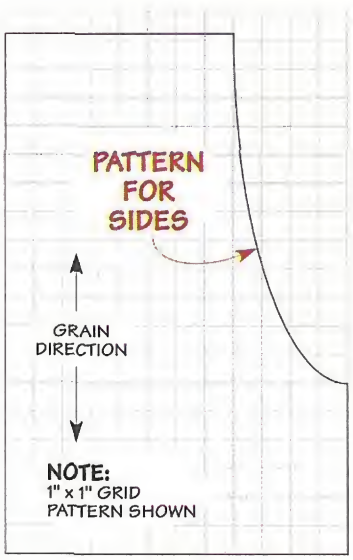

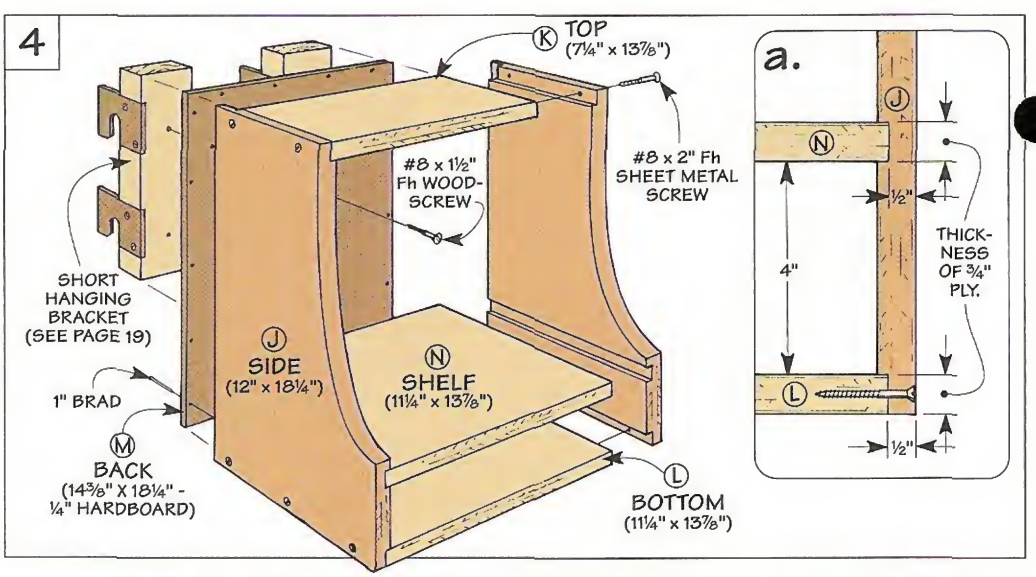

Hardware

- (10) #8 x 2" Fh Sheet Metal Screws
- (4) #8 x 1½" Fh Woodscrews
- (16) #8 x ¾" Fh Woodscrews
- (12) ¼" I.D. x ½"-Long Nylon Sleeves
- (12) ½" I.D. x ½"-Long Nylon Sleeves
- 1" Brads

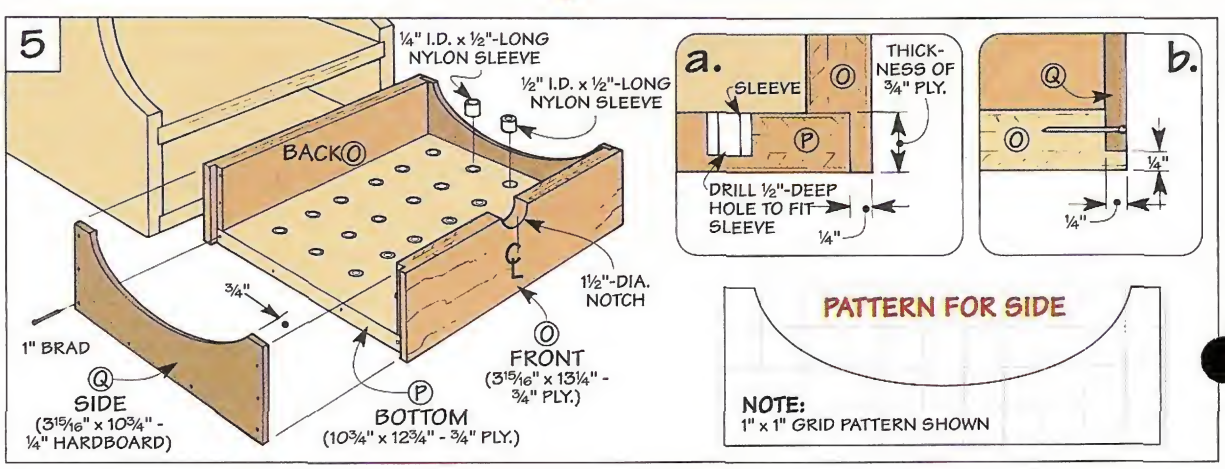

Palm Sander

I don't know about you, but I think self-adhesive sandpaper is the greatest thing to come along since sliced bread.

That's why I incorporated two compartments in this storage unit to hold rolls of this "sticky-back" sandpaper, see photo. (The actual inspiration came along one day in the bathroom, but more about that later). To keep dust from contaminating the adhesive backing, I added a door in front.

This storage unit is similar to the one for the router. The *sides (R)* are rabbeted to accept a *top (S)*, see Fig. 6. And the *shelf (T)* fits in a dado in each side.

But the difference here is how the *bottom (U)* fits into the sides. To allow the door to fit flush in front, the bottom isn't as deep (wide) as the sides.

If you cut rabbets for the bottom, they'd be exposed at the front of the cabinet. So these pieces are assembled with simple butt joints.

Before assembling the unit, there's a bit of work that needs to be done on the compartments that hold the sandpaper.

SANDPAPER STORAGE. The compartments are formed by a small *divider (V)*, see Fig. 7. (Here's where my "bathroom inspiration" came in.) To hold the sandpaper, I bought a couple of toilet paper rollers at the local home center. These rollers have a "tenon" on each end that fits into holes drilled in the sides and divider.

Once the holes are drilled, you can glue and screw all the parts together. Then just attach a hardboard *back (W)* and the two hanging brackets as before.

TEAR STRIP. To make it easy to tear off strips of sandpaper, I cut a hacksaw blade to fit between the sides and screwed it to the front edge of the bottom (T), see Fig. 8.

DOOR. Finally, I added a flip-up *door (X)*. Besides keeping out dust, the door holds the sandpaper in place as you tear off a strip, see Fig. 8a. The door is hinged to the shelf with butt hinges. These hinges fit in shallow mortises cut in the top edge of the door.

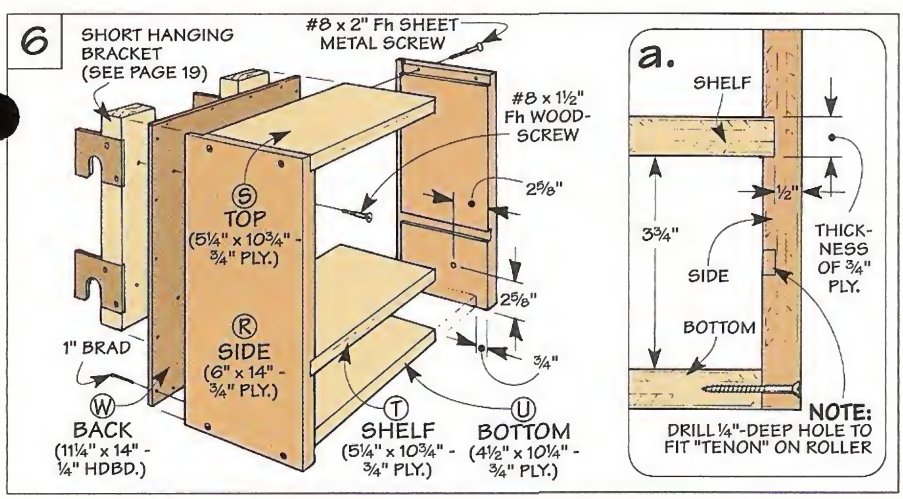

Hardware

- *(8) #8 x 2" Fh Sheet Metal Screws*
- *(4) #8 x 1½" Fh Woodscrews*
- *(16) #8 x ¾" Sheet Metal Screws*
- *(2) 1⅜"-wide x 2"-long Butt Hinges*
- *1" Brads*

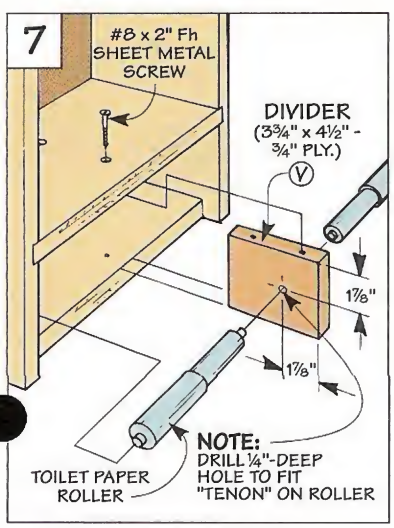

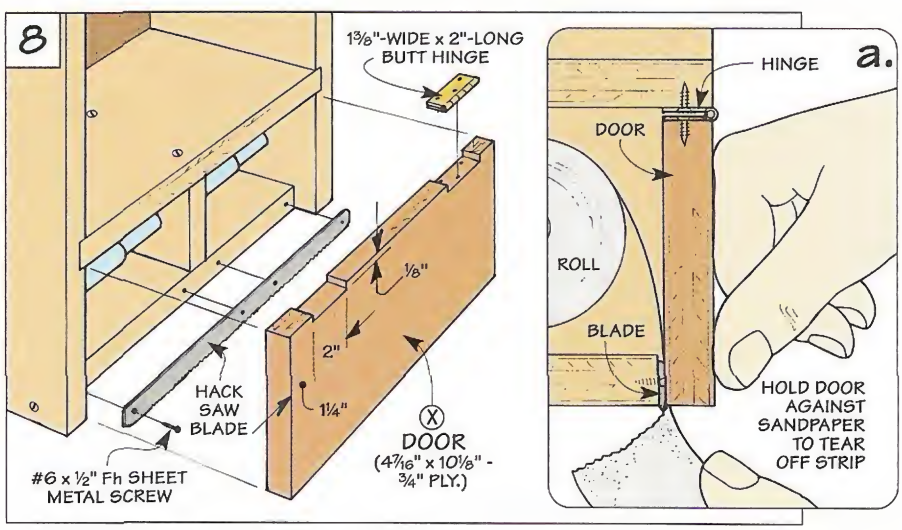

Shop Solutions

TIPS FROM OUR SHOP

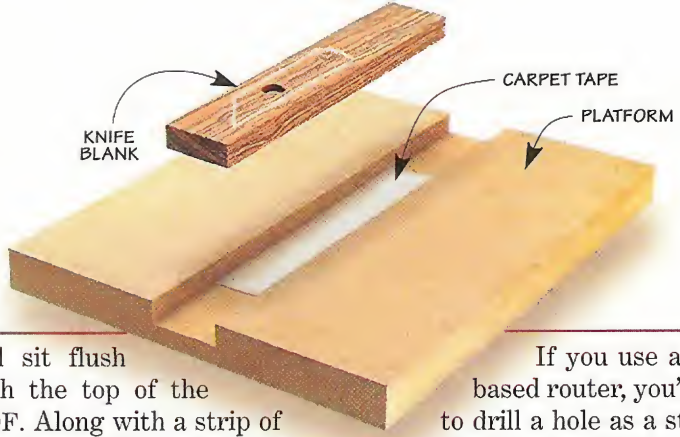

ROUTING SMALL PARTS

■ When routing the recess for the blade in the Marking Knife (page 14), I ran into two problems. First, the workpiece is too small to clamp down without having the clamps get in the way of the router. Also, a small workpiece like this doesn't offer enough support to keep the router from tipping.

The solution to both problems is a simple routing platform. It's just a piece of ¾"-thick MDF with a groove cut in it to fit the knife blank. Note: Cut the groove deep enough so the blank will sit flush with the top of the MDF. Along with a strip of carpet tape, the groove holds the blank securely in place. And the platform supports the base of the router.

If you use a fixed-based router, you'll need to drill a hole as a starting point for the router bit, see Step 1. Once the hole is drilled, rout the mortise just shy of the layout line, see Step 2.

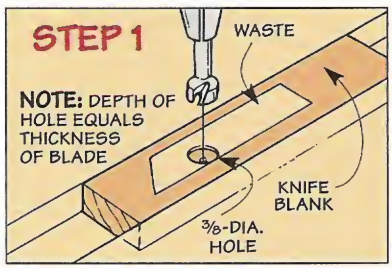

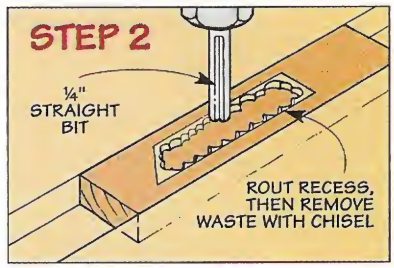

CUTTING MULTIPLES

■ Before building the Modular Wall Storage System shown on page 16, I sat down with a hot cup of coffee to count the number of hardboard hooks I had to make. But by the time I added them all up, my coffee was getting cold. That's because altogether, the system had over 100 hooks.

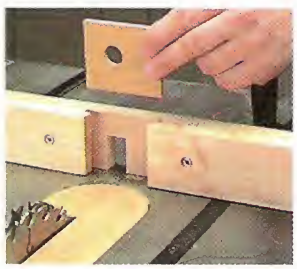

To cut the slots for these hooks quickly and safely, I used a simple jig and a dado blade mounted in the table saw. The hooks are inserted into the jig like slides in a projector, see upper photo. Then the jig carries the hook through the blade, see lower photo.

The jig is made up of two main parts: an auxiliary fence, and a pair of keeper blocks, see Fig. 1. To hold the hooks in place, there's a rabbet on one end of each keeper block. Each rabbet forms a lip that fits over the hook and keeps it from falling out as you make a cut, see Fig. 1a. Note: Cut these rabbets so the hook slides in with a friction fit.

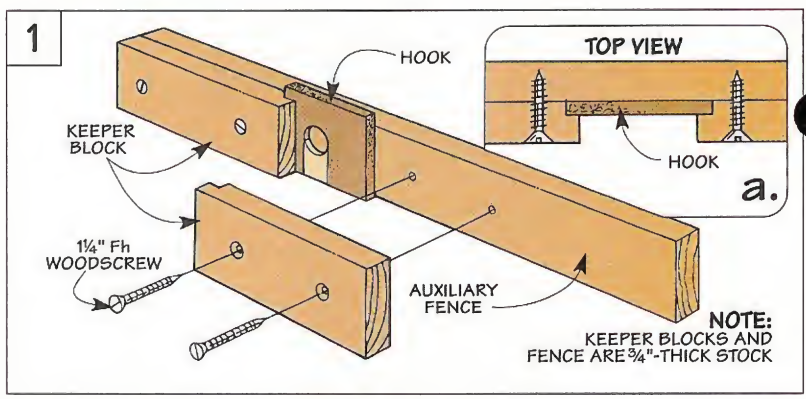

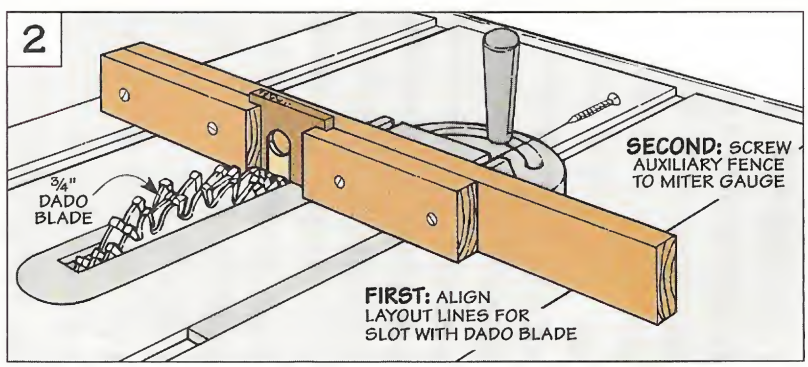

To assemble the jig, screw one keeper block to the auxiliary fence. Then use a hook as a spacer to position the second block.

With one of the hooks in place, it's just a matter of aligning the layout lines for the slot with the dado blade, see Fig. 2. Then just screw the auxiliary fence to the miter gauge and cut the slots.

Sources

PRODUCT INFORMATION

ShopNotes Project Supplies is offering some of the hardware and supplies needed to build the projects in this issue. We've also put together a list of other mail-order sources that have similar hardware and supplies.

Laminated Kebiki Blade ►

The Marking Knife shown on page 14 uses a high quality blade that's typically used in a Japanese marking gauge called a kebiki. Made of laminated white steel, these blades are hand forged and carefully tempered to a Rockwell hardness of Rc 64, so they hold a fine, sharp edge.

The blade we used has a single, pre-sharpened bevel. It's 5/8" wide and 2 1/2" long, but the blades are also available in 1/4", 3/8", and 1/2" widths. For a mail-order source of kebiki blades, refer to the margin at right.

Rare-Earth Magnet ►

We used a small, but very strong magnet in the Marking Knife (page 14) called a "rare-earth" magnet. To really appreciate the strength of this magnet, you almost need to see (and feel) it tug the cap out of your hand and over the blade.

These magnets are nickel-plated, and the edges are rounded slightly to prevent chipping. We used 1/2"-dia. magnets, but they're also available in 1/4" and 3/8"-dia. sizes, see margin.

Modular Wall Storage ►

The Modular Wall Storage System featured on page 16 has a number of individual storage units to help organize your tools and supplies. Each storage unit hangs from a grid that's attached securely to the wall.

The grid and storage units are made from materials found easily at most home centers. We used "two-by" material (Douglas fir) and 1/2" electrical conduit for the grid. And 3/4" plywood (birch), 1/4" hardboard, and thin strips of hardwood are all you need to build the storage units.

MAIL ORDER SOURCES

Japan Woodworker
800-537-7820
Kebiki Blades

Lee Valley & Veritas
800-871-8158
Rare-Earth Magnets

Woodcraft
800-225-1153
Rare-Earth Magnets

Selected Guide to Our Best Shop-Made Storage Projects

These handy, shop-built storage projects will help you get the most efficient use from the space that's available in your workshop or garage.

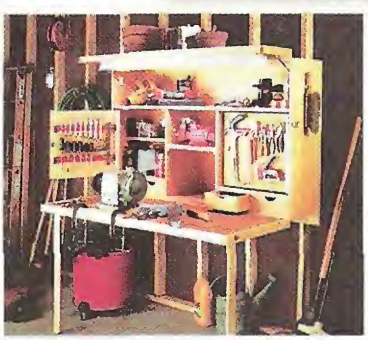

▲ Fold-Down Work Center

To take up a minimal amount of space, this Fold-Down Work Center mounts to a wall. Tool boards, drawers, and shelves provide built-in storage. And the front of the case folds down to create a stable work surface.

We're offering a complete hardware kit to build the Work Center. *ShopNotes* No. 14 is also included.

FOLD-DOWN WORK CENTER KIT
6814-300.....$46.95

Roll-Around ▲ Shop Cart

With its pull-out trays and pegboard panels, there's plenty of storage inside *and* out in this Roll-Around Shop Cart.

ShopNotes Project Supplies is offering a kit that has all the hardware needed to build the Shop Cart. *ShopNotes* No. 5 is also included to provide step-by-step plans.

ROLL-AROUND SHOP CART KIT
6805-225.....$69.95

▲ Lumber Storage Rack

This Lumber Storage Rack has several rows of iron pipe to provide storage for long boards. And there's a bin for storing sheets of plywood.

A hardware kit (with plans provided in *ShopNotes* No. 17) is available to build the Lumber Rack. It includes all the hardware you need except the iron pipe.

LUMBER STORAGE RACK KIT
6817-225.....$17.95

TO PLACE AN ORDER CALL
800-347-5105
(KEY CODE: SN 39)

Scenes from the Shop

▲ *The laundry room is a perfect place to add a Modular Wall Storage System like the one shown on page 16. Here, the storage cabinet and work table are all that's needed to get a handle on laundry room clutter.*

▲ *Made of inexpensive materials that are readily available, this versatile Wall Storage System is also ideal for a child's room. Sturdy shelves provide extra storage. And the work table doubles as a handy desk.*